Wrocław University of Science and Technology

Contribute to the safe operation of a ship subject to the IGF Code

Jarosław Poliński, PhD
Maciej Dziewiecki

Who we are

Wrocław University of Science and Technology

- One of the largest academic schools in Poland
- 16 Faculties in Wrocław, Jelenia Gora, Wałbrzych and Legnica

Who we are

Wrocław University of Science and Technology

- Department of Cryogenics, Aviation and Process Engineering is a part of the WUST Faculty of Mechanical and Power Engineering
- Main competence – helium cryogenics
- Science and R&D collaboration with:
  - CERN, Ch
  - GSI, Ge
  - ESS, S
  - DESY, Ge

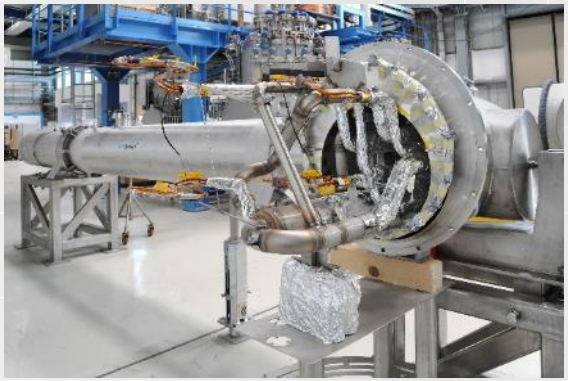

- Main projects:
  - Cryodistribution for ESS accelerator
  - Cryodistribution for SIS100 and S-FRS FAIR accelerators
  - SC cavity test stand for XFEL project

Who we are

Samso Ferry – LNG dual-fuel ship

First LNG fuel system fully designed and produced in Poland

Shipowner : Samso Kommune (DK)

Ship manufacturer: Remontowa Shipyard Ltd.(PL)

LNG Fuel System:

- **Design**: Wroclaw University of Technology (PL)
- **LNG Tank production**: FUO Rumia Ltd. (PL)
- **Cold-box and auxiliaries production**: KrioSystem Ltd. Wroclaw (PL)

Classification society: DNV-GL (N, PL)

Fuel systems subject to the IGF Code

Simplified P&ID of Samso Ferry fuel gas system

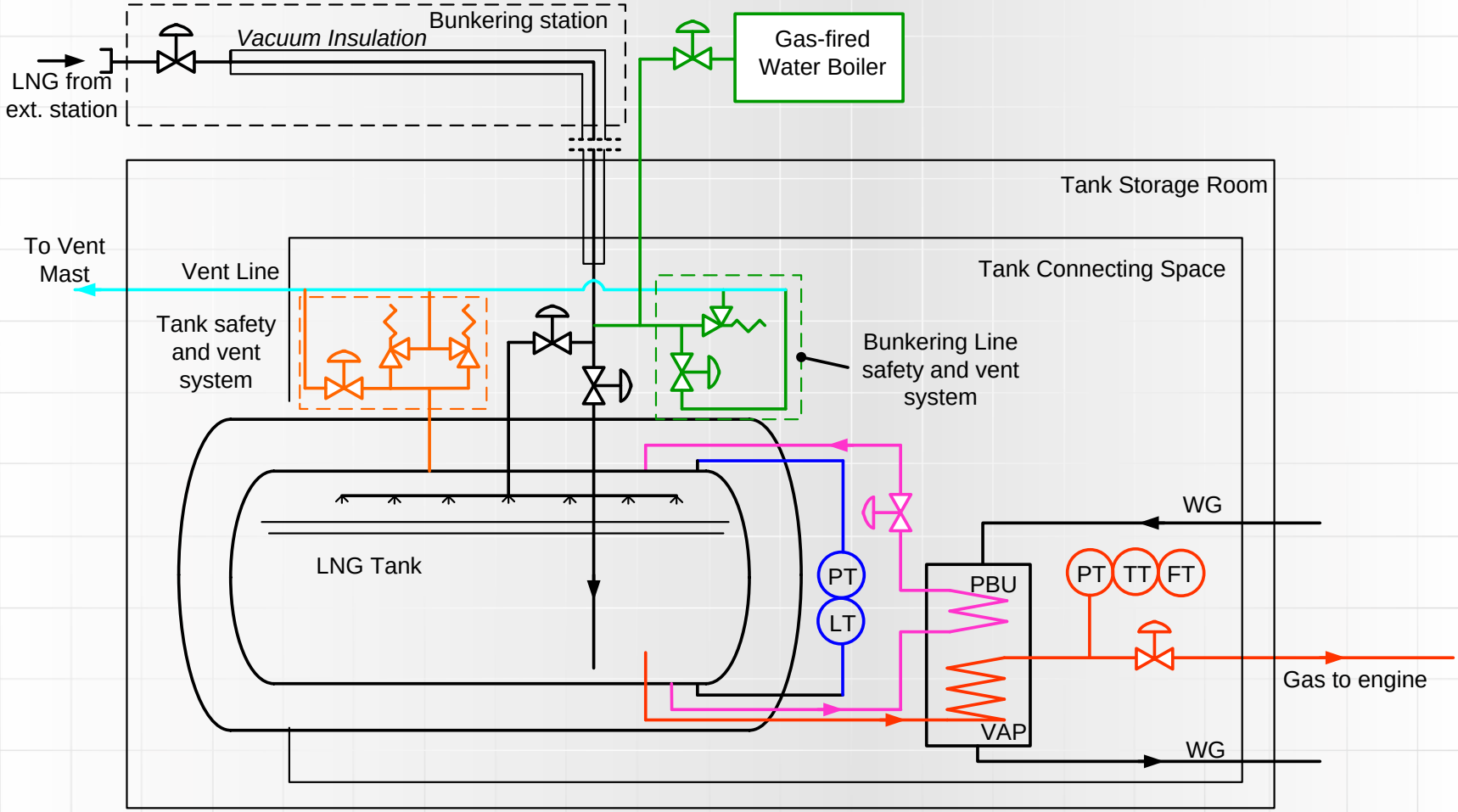

Who we are

Samso Ferry – LNG Fuel System

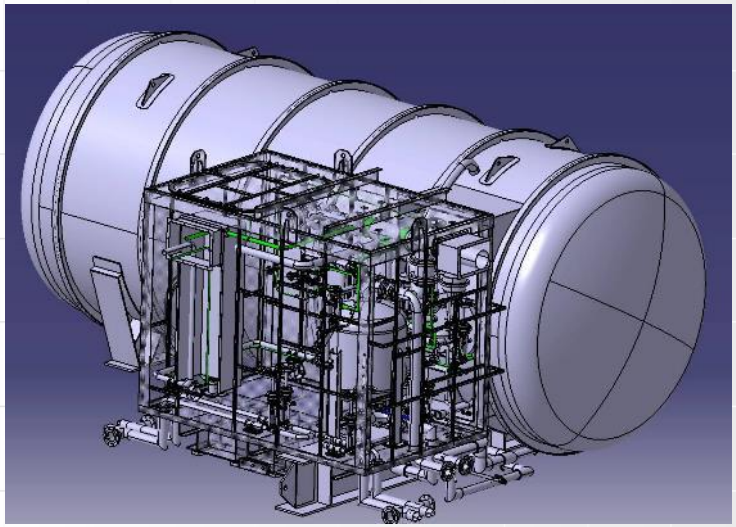

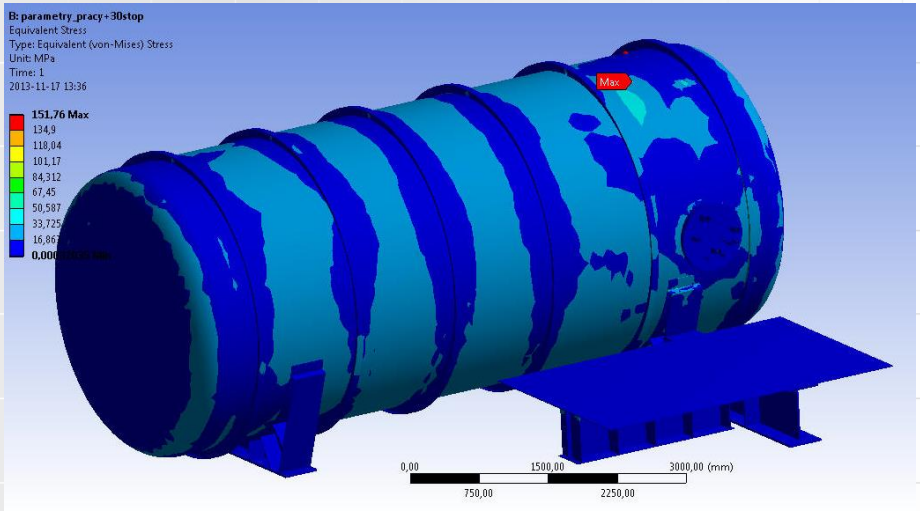

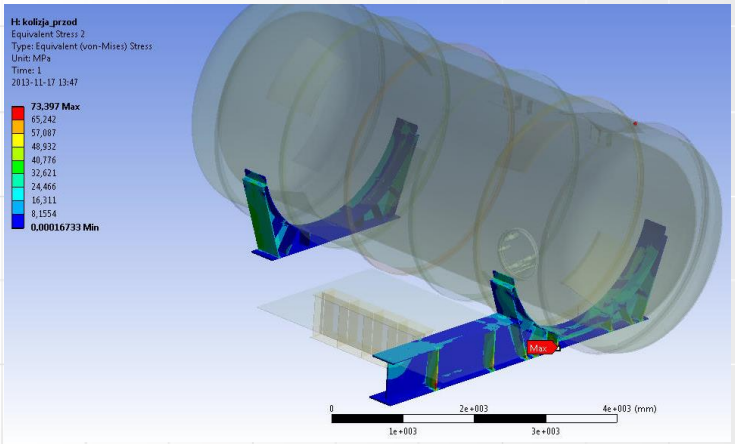

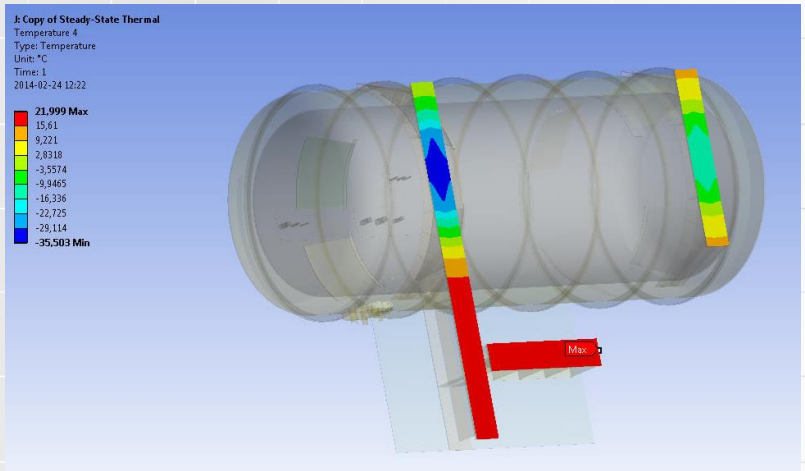

LNG tank design, structural and thermal design done at WUST

Who we are

Samso Ferry – LNG Fuel System

LNG Tank under construction at Remontowa LNG System Ltd, Poland (former FUO Rumia)

Who we are

Samso Ferry – LNG Fuel System

LNG tank connection space under construction at KrioSystem Ltd, Poland

Who we are

Samso Ferry – LNG Fuel System

LNG tank with integrated TCS – transport to the ship

Who we are

Samso Ferry – LNG Fuel System

LNG tank with integrated TCS – view from the ship tank room

IGF Code

IGF Code is an acronym for **„International Code of Safety for Ships using gases or other Low-flashpoint fuels”** developed by The International Maritime Organization’s Maritime Safety Committee. IGF Code aims to minimize the risk to the ship, its crew and the environment, it is mandatory under the International Convention for the Safety of Life at Sea (SOLAS).

Content of training:

- Basic knowledge of the **physical properties of fuels** on board ships subject to the IGF Code (fuels adressed by the IGF Code; properties and charasteristics)
- Basic knowledge of ships subject to the IGF Code, their **fuel systems and fuel storage systems** (types of fuel systems, cryogenic or compressed storages; general arrangement of fuel storage systems; hazard areas)
- Basic knowledge of **fuel storage systems operation** on board ships subject to the IGF Code (piping systems and valves; relief systems and protection screens; protection against cryogenic accidents)

I. Physical properties of fuels on board ships subject to the IGF Code

Fuels adressed by the IGF Code

„Code includes regulations to meet the functional requirements for natural gas fuel. Regulations for other low-flashpoint fuels will be added to this Code as, and when, they are developed by the Organization.

In the meantime, for other low-flashpoint fuels, compliance with the functional requirements of this Code must be demonstrated through alternative design."

IGF Code, Preambule

Directly:
Natural Gas (Liquid Natural Gas LNG, Compressed Natural Gas CNG, …)

Indirectly:
Fuels with flashpoint below 60 °C (<C8 Hydrocarbons, Methanol, Fuel Cells, …)

Flashpoint is the temperature at which a particular organic compound gives off sufficient vapour to ignite in air.

Properties and characteristics

Natural Gas is a hydrocarbon gas mixture of primarly methane, ethane, propane and others. Can be characterized by Upper Wobbe Index W_s (in Poland higher than 23 MJ/m3 by definition)

Physico-chemical properties of the LNG (Methane)

Molecular weight [kg/mol.]	16,4
Boiling point [°C, K] (@ 1 bar)	-161,8°C, 111 K
Odor	Odorless
Color	Colorless
Temp. of self-ignition [°C] (@ 1 bar)	540÷580
Flame temperature	~2800 °C (oxygen), ~1960 °C (air)
Toxicity	Non-toxic
Corrosivity	Non-corrosive
Carcinogenicity	Not found
Flam. limits of vapor in the air [% vol.]	5÷15
Solubility in water	Very low

Properties and characteristics

Qualitative characteristics of the LNG in the world (2010)

Content of Nitrogen* [% mol.]	0,0 - 0,9
Content of Methan* [% mol.]	81,6 - 99,7
Content of Ethan* [% mol.]	0,1 - 13,4
Content of Prophane* [% mol.]	0,0 - 3,7
Content of C4+* [% mol.]	0,0 - 1,6
LNG Density* [kg/m3]	423 – 485
LNG Specific Gravity	0,415-0,45
Expansion factor* NG/LNG [m3/m3]	559 – 590
NG Density* [kg/m3]	0,719 - 0,867
NG Specific Gravity	0,55 – 1,0
Heat of combustion* [MJ/m3]	39,8 - 46,5
Upper Wobbe Index* [MJ/m3]	53,3 - 56,8

* G. Rosłonek „Skroplony gaz ziemny – LNG. Część I – Zagadnienia ogólne i podstawy procesu rozliczeniowego”, NAFTA-GAZ 2/2016

II. Ships subject to the IGF Code, their fuel systems and fuel storage systems

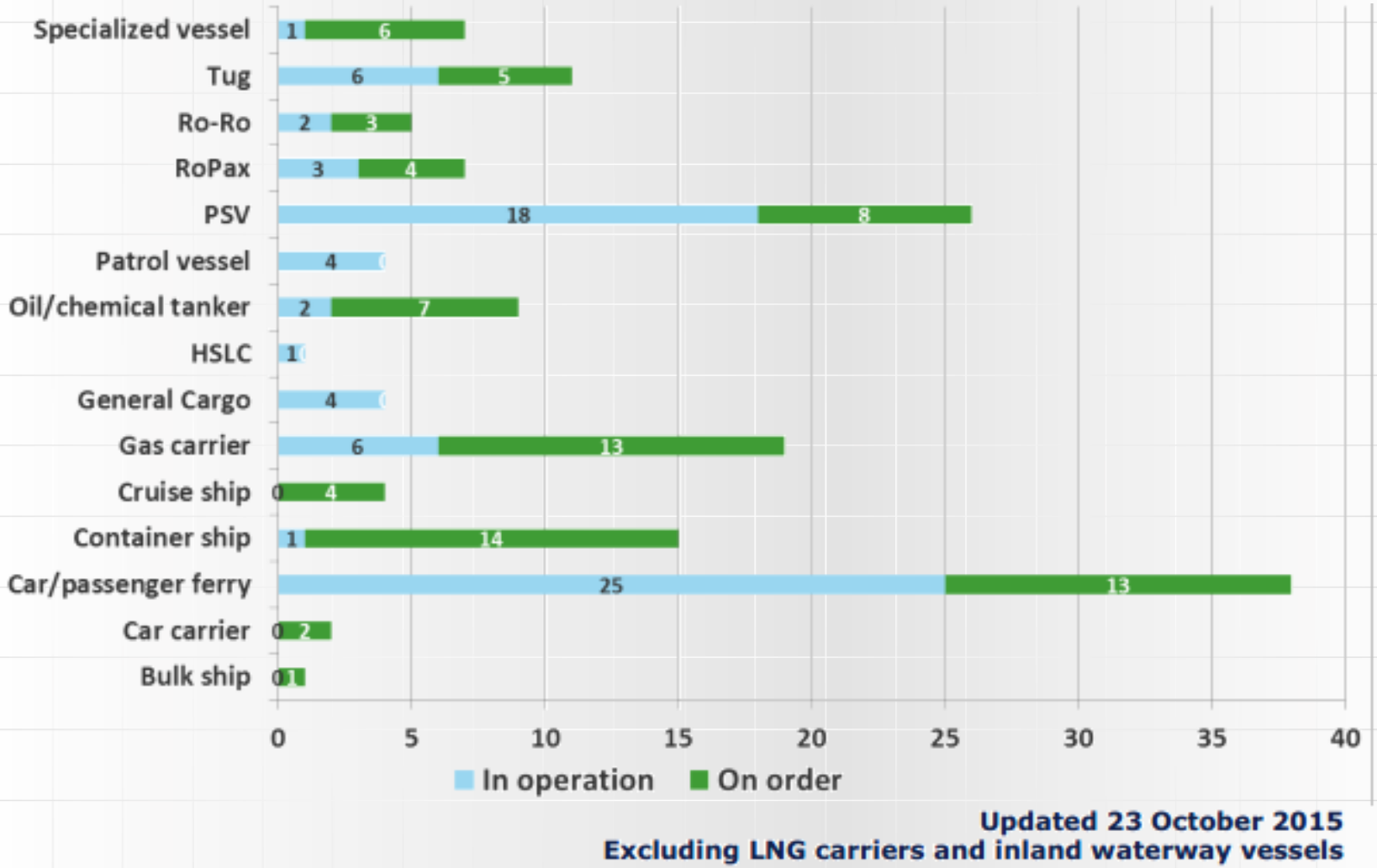

Updated 23 October 2015
Excluding LNG carriers and inland waterway vessels

- Gas carriers need not apply the IGF code, only IGC code
- Also if not burning own cargo, but a different gas – for example an LPG carrier using LNG as fuel

Fuel systems subject to the IGF Code

Engines

- High pressure type - Diesel cycle
  - gas is injected after oxidant air compression
  - mixture in ignited by pilot liquid fuel (diesel) injection
  - supplying gas pressure: 250÷300 bar
  - oil fuel only when operating below 15-20 % of the engine load – problem with high emission in the ports or close-to-shore areas

- Low pressure type - Otto cycle
  - gas and oxidant air are mixed before the mixture compression
  - pilot fuel for mixture injection (as in HP engines)
  - supplying gas pressure: 5÷7 bar
  - low emission at low engine loads
  - risk of unintended (knocking) ignition – max 80% of full load if engine works in the gas mode

Fuel systems subject to the IGF Code

Non-pressure vessels (membrane type, A-type and B-type tanks)

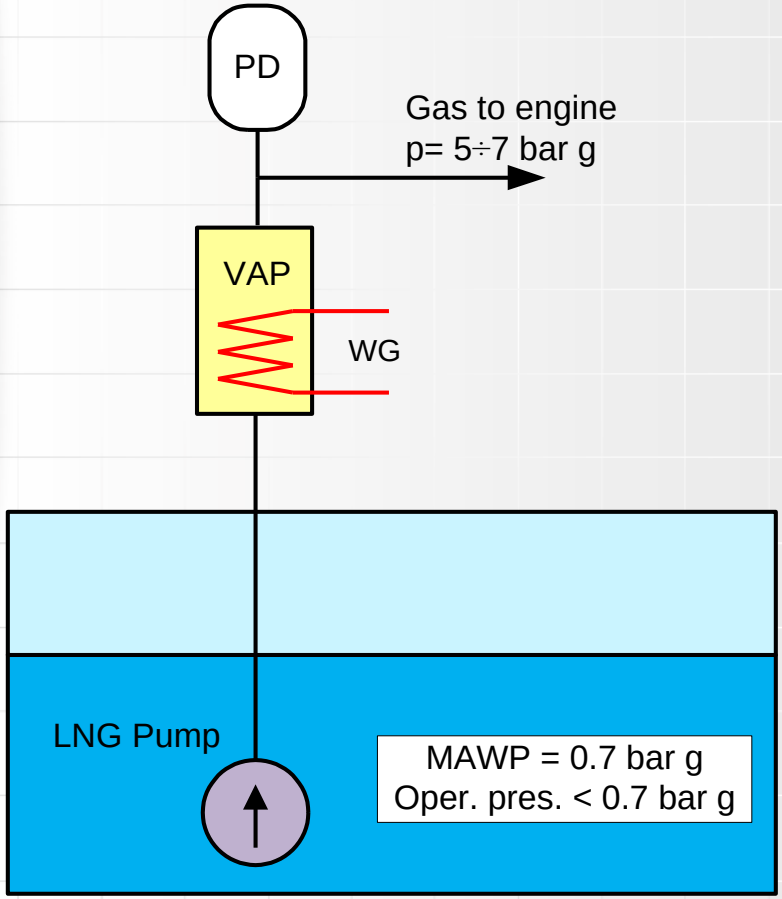

- *LNG centrifugal pump*
- *LNG evaporated and warmed-up in the VAP with water-glycol (WG) brine*
- *Pressure pulsation dumper (PD) is required*
- *Low exploitation costs*
- *High installation costs*

Fuel systems subject to the IGF Code

Pressure vessels with gravity-based PBU

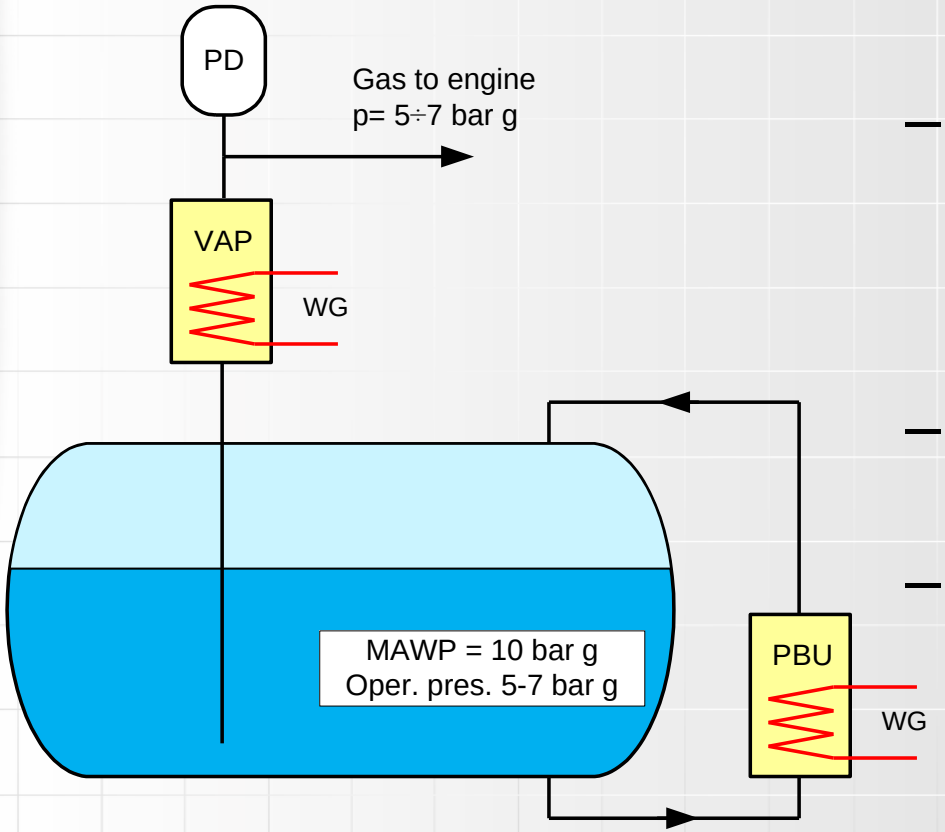

- *Pressure in the tank produced in pressure built-up unit (PBU)*
- *Pressure in the tank compatible with low-pressure engine requirements*
- *Lack of the mechanical gas compressors*
- *Simple and reliable design*

Fuel systems subject to the IGF Code

Pressure vessels with forced flow thought PBU

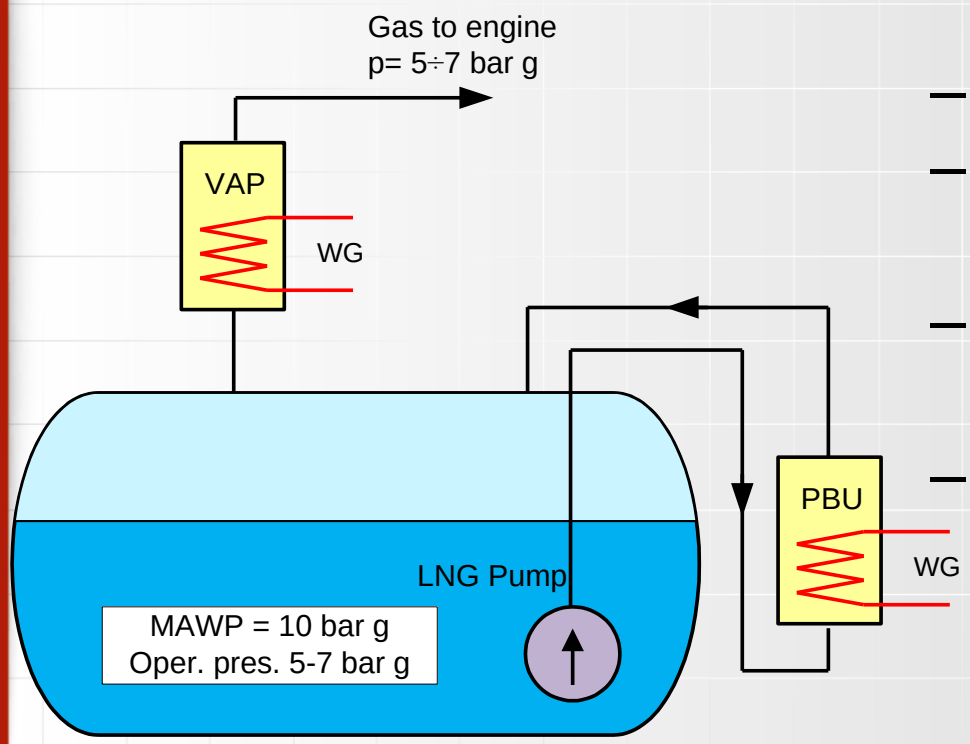

- *LNG pump for PBU*
- *Whole LNG evaporated in the PBU (larger size)*
- *VAP for gas warm-up only (smaller size)*
- *PD is no necessary*

Fuel systems subject to the IGF Code

Systems for high-pressure engine

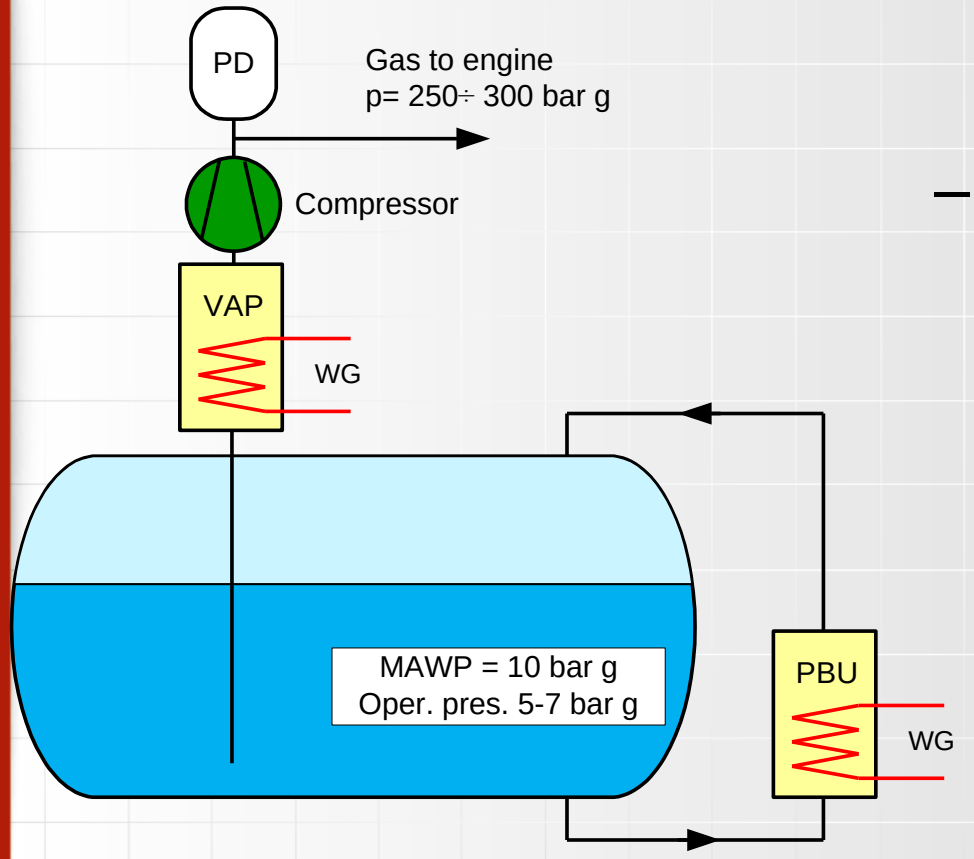

– *Whichever previously discussed scheme is used here the multistage gas compressor after VAP is necessary*

Fuel systems subject to the IGF Code

Membrane tanks

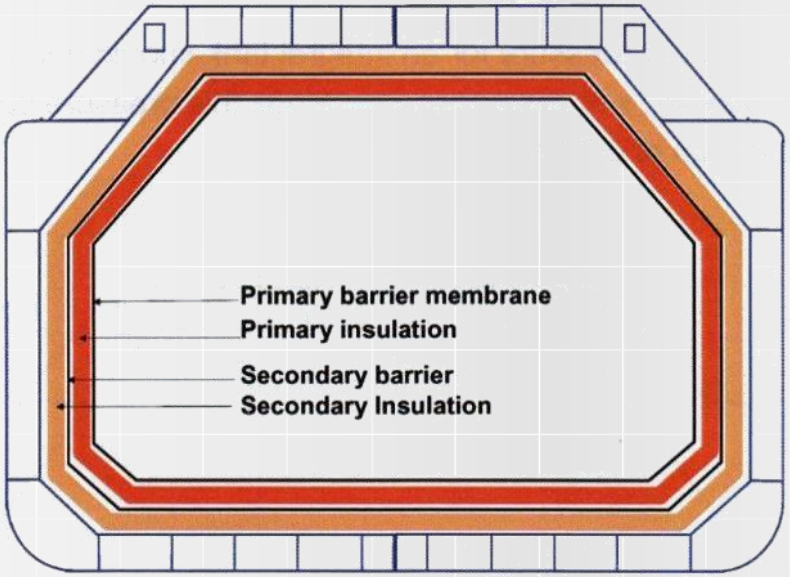

- non-self-supporting
- consist of a thin layer (membrane) supported through insulation by the adjacent hull structure
- MAWP < 0.25 barg
- if the hull structure is of proper design MAWP < 0.7 barg
- capacity: 100 ÷ 20 000m^3
- high production costs

Fuel systems subject to the IGF Code

Independent A-type (prismatic)

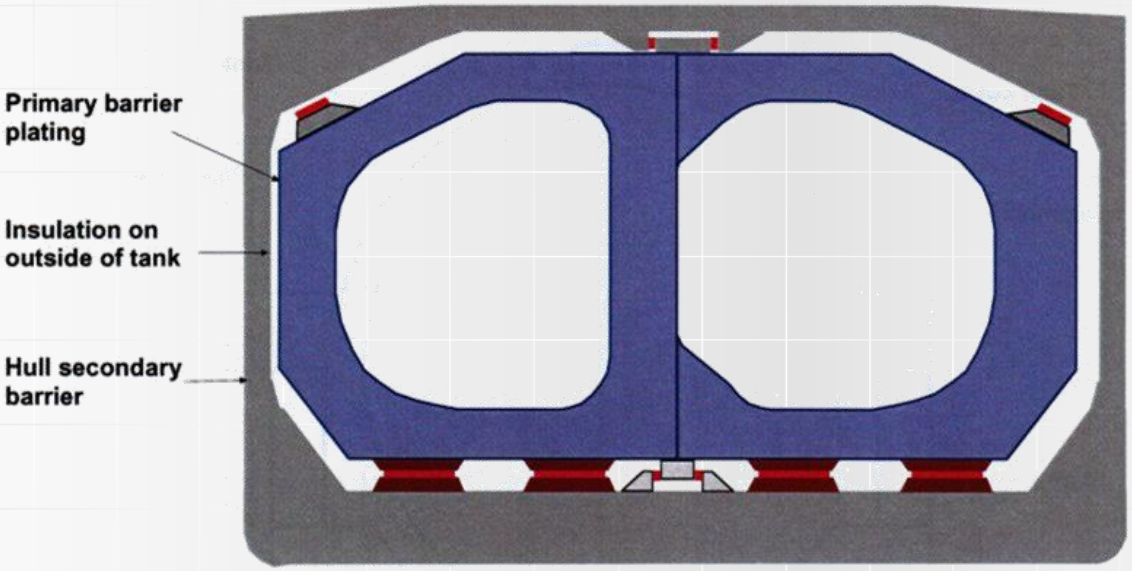

- designed using classical ship-structural analysis procedure
- are required to have a full secondary barrier
- MAWP < 0.25 barg
- if the hull structure is of proper design MAWP < 0.7 barg
- capacity: 100 ÷ 20 000m3

Fuel systems subject to the IGF Code

Independent B-type (prismatic, spherical…)

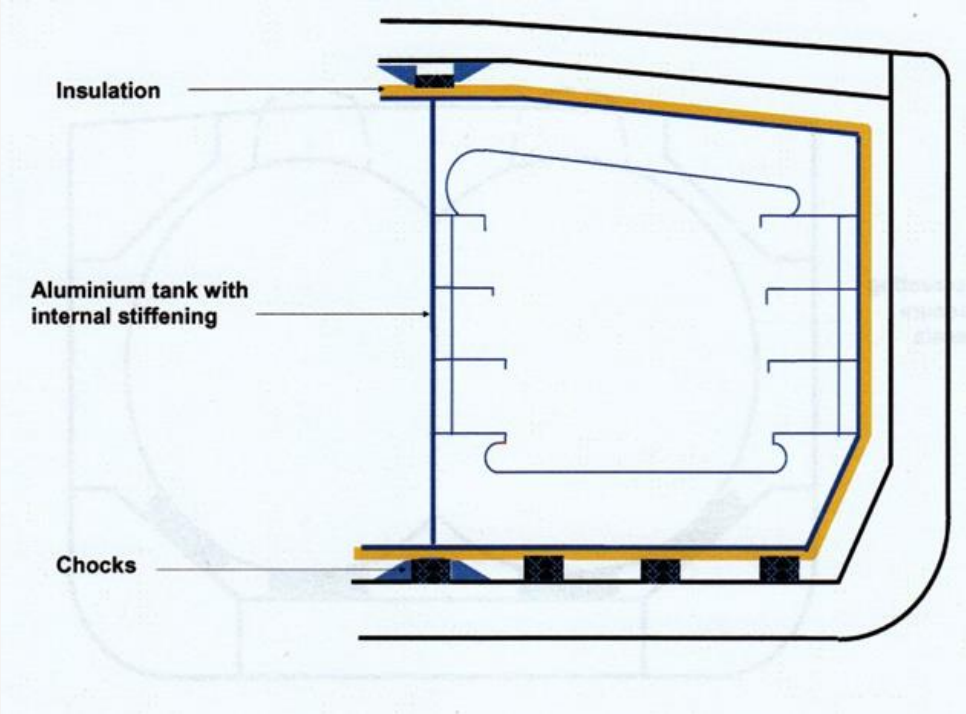

- similar to A-type tanks
- are designed using model tests, sophisticated analytical tools and analysis methods to determine stress levels, fatigue life and crack propagation characteristics
- are required to have a partial secondary barrier

Fuel systems subject to the IGF Code

Independent C-type pressure vessels (cylindrical, bilobe)

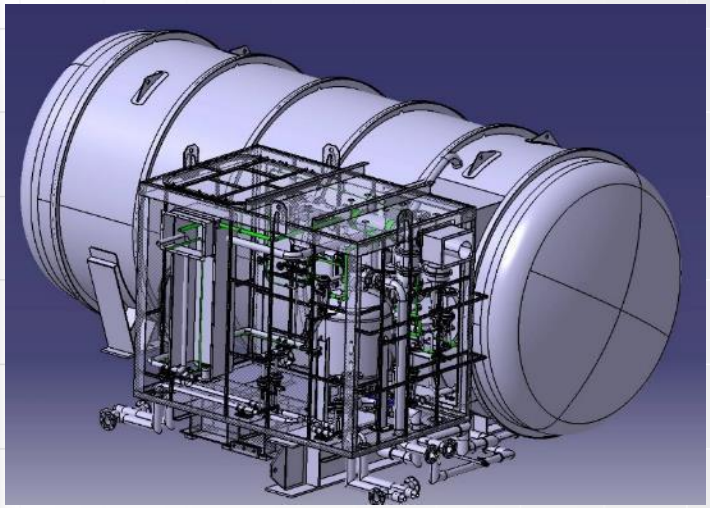

- MARVS <10 bar g
- 90% MARVS > MAWP > 0.7 bar g
- usually cylindrical shape
- presently capacity: up to 500-600 m3
- future capacity: up to 2000 m3
- relatively cheap
- small hull volume fulfillment ratio
- can be installed in the new-building and for upgraded existing ships

Fuel systems subject to the IGF Code

CNG Tanks

CNG Tanks are divided into categories depending on the materials and manufacturing techniques.

- The simplest and cheapest CNG-1 tanks are made entirely from metal (steel, aluminum rarely) it is assumed that their mass index per geometry liter is in range 0.8-1.1 kg/l.
- Tanks CNG-2 haves a metal inputs (aluminum or steel) and a circumferential sheath of carbon fiber impregnated with epoxy resin. Mass-storage capacity indicator for this type of reservoirs equals 0.6-0.8 kg/l.
- Tanks CNG-3 differs from CNG-2 with that they have a full carbon fiber sheath (crossed and peripheral), and for obtaining high mechanical stresses the top layer is made of glass fiber, both layers are impregnated with epoxy resin, the weight is 0, 3-0,5 kg per per liter of capacity.
- Tanks CNG-4 haves non-metallic input, with full braid made of carbon fibers and glass impregnated with epoxy resin. There are also known tanks braided with aramid fibers. Per liter of such tank accounts mass 0.3-0.4 kg of the tank.

The burst pressure for CNG tanks, depending on the brand and category performance ranges from 45 MPa to up to 75 MPa.

Fuel systems subject to the IGF Code

CNG Tanks

Storage of CNG in enclosed spaces is normally not acceptable, but may be permitted after special consideration and approval by the Administration provided the following is fulfilled:

- adequate means are provided to depressurize and inert the tank in case of a fire which can affect the tank
- all surfaces within such enclosed spaces containing the CNG storage are provided with suitable thermal protection against any lost high-pressure gas and resulting condensation unless the bulkheads are designed for the lowest temperature that can arise from gas expansion leakage; and
- a fixed fire-extinguishing system is installed in the enclosed spaces containing the CNG storage. Special consideration should be given to the extinguishing of jet-fires.

Fuel systems subject to the IGF Code

General arrangement of fuel storage systems

- The fuel tank(s) shall be located in such a way that the probability for the tank(s) to be damaged following a collision or grounding is reduced to a minimum taking into account the safe operation of the ship and other hazards that may be relevant to the ship;
- Fuel containment systems, fuel piping and other fuel sources of release shall be so located and arranged that released gas is led to a safe location in the open air;
- The access or other openings to spaces containing fuel sources of release shall be so arranged that flammable, asphyxiating or toxic gas cannot escape to spaces that are not designed for the presence of such gases
- Fuel piping shall be protected against mechanical damage;
- The propulsion and fuel supply system shall be so designed that safety actions after any gas leakage do not lead to an unacceptable loss of power; and
- The probability of a gas explosion in a machinery space with gas or low-flashpoint fueled machinery shall be minimized.

Fuel systems subject to the IGF Code

General arrangement of fuel storage systems

Possible positions of the fuel tank:
- open deck
- closed space

In generall there is no restriction for location below the accommodations provided that risks are properly identified and addressed

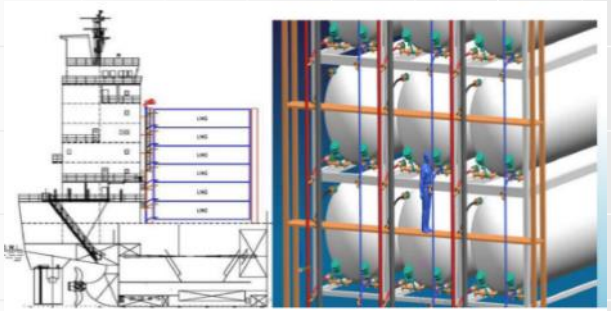

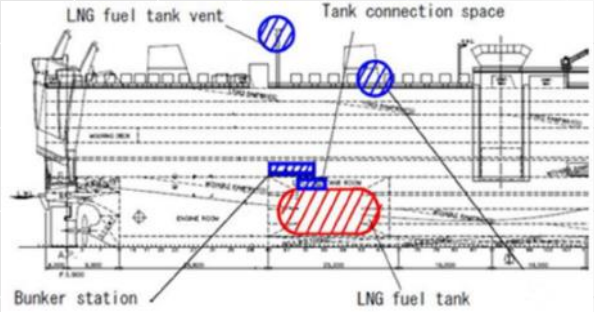

Main philosophy is to keep to a maximum the level of segregation between gas dangerous spaces and safe spaces
- No direct communication between gas spaces and non-hazardous spaces
- Reinforced fire insulation of gas spaces (A60 + Cofferdam)
- Hazardous area classification
- Segregation of piping system

Fuel systems subject to the IGF Code

General arrangement of fuel storage systems

Position of the tanks. **First method**

Minimum distance from ship side at summer waterline : B/5 or 11.5 m whichever is less,
Minimum distance from ship side :
Passenger ships : B/10
Cargo ships : Between 0.8 and 2m depending on the tank capacity
Minimum distance from bottom line : B/15 or 2 m whichever is less

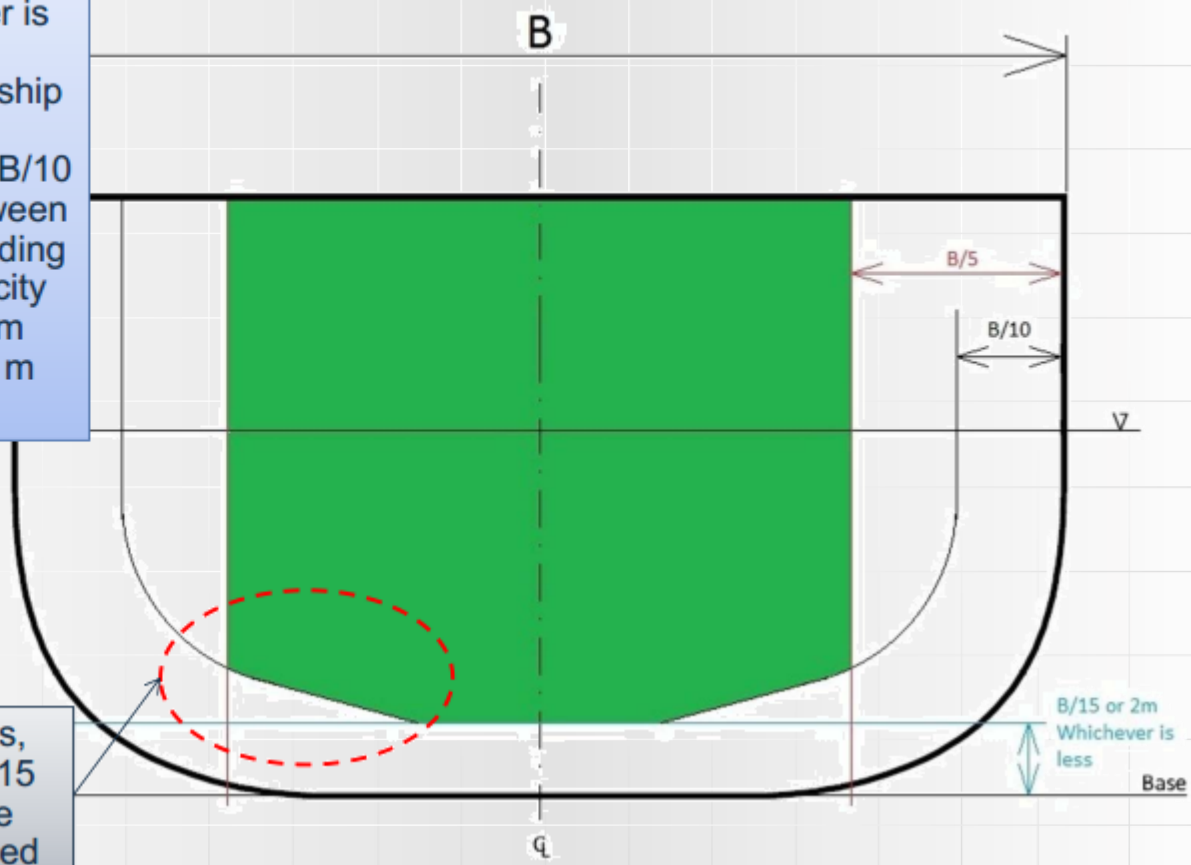

For passenger ships, junction between B/15 and B/10 should be more precisely defined

Fuel systems subject to the IGF Code

General arrangement of fuel storage systems

Position of the tanks. **Second method**

F_{cn} criteria is calculated using simplified method from probabilistic stability. This value is supposed to represent the probability to hit the tank in case of collision

$$f_{CN} = f_L \cdot f_T \cdot f_V$$

Criteria :

$f_{CN} \leq 0.02$ for Pax ships

$f_{CN} \leq 0.04$for Cargo ships

Minimum distance from ship side :

Passenger ships : B/10

Cargo ships : Between 0.8 and 2m depending on the tank capacity

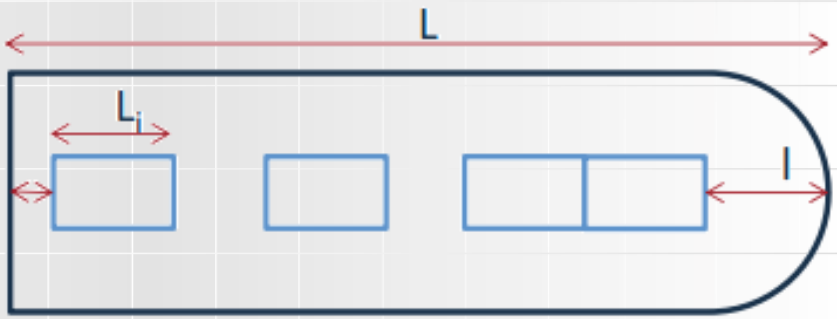

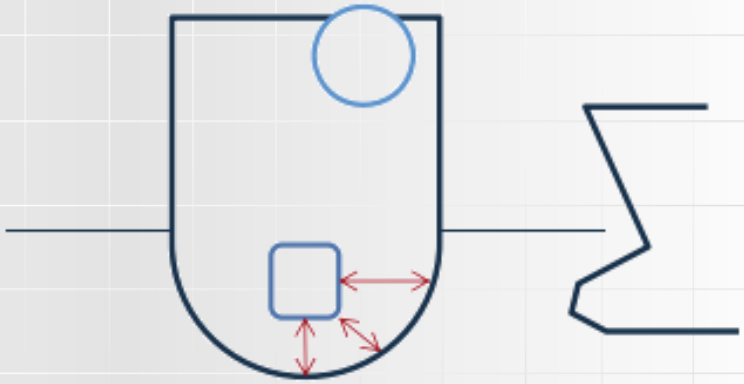

Fuel systems subject to the IGF Code

General arrangement of fuel storage systems

Position of pipings and fuel preparation rooms.

- Fuel pipes shall not be located less than 800 mm from the ship's side.
- Fuel piping shall not be led directly through accommodation spaces, service spaces, electrical equipment rooms or control stations as defined in the SOLAS Convention.
- Fuel pipes led through ro-ro spaces, special category spaces and on open decks shall be protected against mechanical damage.
- Gas fuel piping in ESD protected machinery spaces shall be located as far as practicable from the electrical installations and tanks containing flammable liquids.
- Gas fuel piping in ESD protected machinery spaces shall be protected against mechanical damage.

- Fuel preparation rooms shall be located on an open deck, unless those rooms are arranged and fitted in accordance with the regulations of IGF Code for tank connection spaces

Fuel systems subject to the IGF Code

General arrangement of fuel storage systems

Position of piping and fuel preparation room.

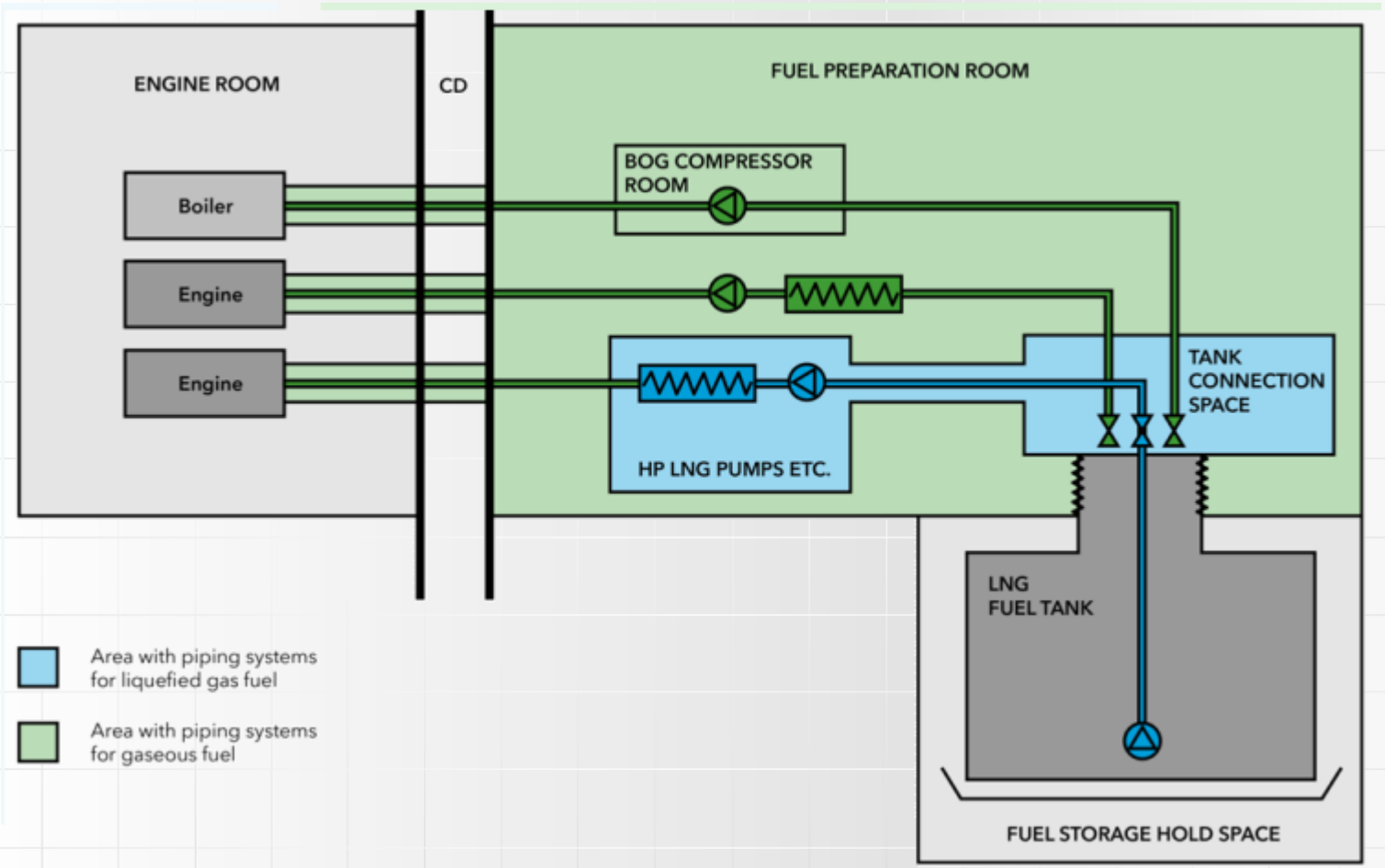

Fuel systems subject to the IGF Code

Hazardous area zones

From definitione it is any place in which an explosive atmosphere may occur in quantities such as to require special precautions to protect the safety of workers.

Hazardous area zone 0: This zone includes, but is not limited to the interiors of fuel tanks, any pipework for pressure-relief or other venting systems for fuel tanks, pipes and equipment containing fuel.

Hazardous area zone 1: This zone includes, but is not limited to:

- tank connection spaces, fuel storage hold spaces and interbarrier spaces;
- fuel preparation room arranged with ventilation;
- areas on open deck, or semi-enclosed spaces on deck, within 3 m of any fuel tank outlet, gas or vapour outlet, bunker manifold valve, other fuel valve, fuel pipe flange, fuel preparation room ventilation outlets and fuel tank openings for pressure release provided to permit the flow of small volumes of gas or vapour mixtures caused by thermal variation;
- areas on open deck or semi-enclosed spaces on deck, within 1.5 m of fuel preparation room entrances, fuel preparation room ventilation inlets and other openings into zone 1 spaces;

Fuel systems subject to the IGF Code

Hazardous area zones

Hazardous area zone 1: This zone includes, but is not limited to:

- areas on the open deck within spillage coamings surrounding gas bunker manifold valves and 3 m beyond these, up to a height of 2.4 m above the deck;
- enclosed or semi-enclosed spaces in which pipes containing fuel are located, e.g. ducts around fuel pipes, semi-enclosed bunkering stations;
- the ESD-protected machinery space is considered a non-hazardous area during normal operation, but will require equipment required to operate following detection of gas leakage to be certified as suitable for zone 1;
- a space protected by an airlock is considered as non-hazardous area during normal operation, but will require equipment required to operate following loss of differential pressure between the protected space and the hazardous area to be certified as suitable for zone 1; and
- except for type C tanks, an area within 2.4 m of the outer surface of a fuel containment system where such surface is exposed to the weather.

Hazardous area zone 2: This zone includes, but is not limited to areas within 1.5 m surrounding open or semi-enclosed spaces of zone 1.

Fuel systems subject to the IGF Code

Fuel containment system

General rules (1/2):

- Natural gas in a liquid state may be stored with a maximum allowable relief valve setting (MARVS) of up to 1.0 MPa.
- The Maximum Allowable Working Pressure (MAWP) of the gas fuel tank shall not exceed 90% of the Maximum Allowable Relief Valve Setting (MARVS).
- A fuel containment system located below deck shall be gas tight towards adjacent spaces.
- All tank connections, fittings, flanges and tank valves must be enclosed in gas tight tank connection spaces, unless the tank connections are on open deck. The space shall be able to safely contain leakage from the tank in case of leakage from the tank connections.
- Pipe connections to the fuel storage tank shall be mounted above the highest liquid level in the tanks, except for fuel storage tanks of type C.
- Piping between the tank and the first valve which release liquid in case of pipe failure shall have equivalent safety as the type C tank,

Fuel systems subject to the IGF Code

Simplified P&ID of Samso Ferry fuel gas system

- *„A fuel containment system located below deck shall be gas tight towards adjacent spaces.*
- *All tank connections, fittings, flanges and tank valves must be enclosed in gas tight tank connection spaces (..)”*

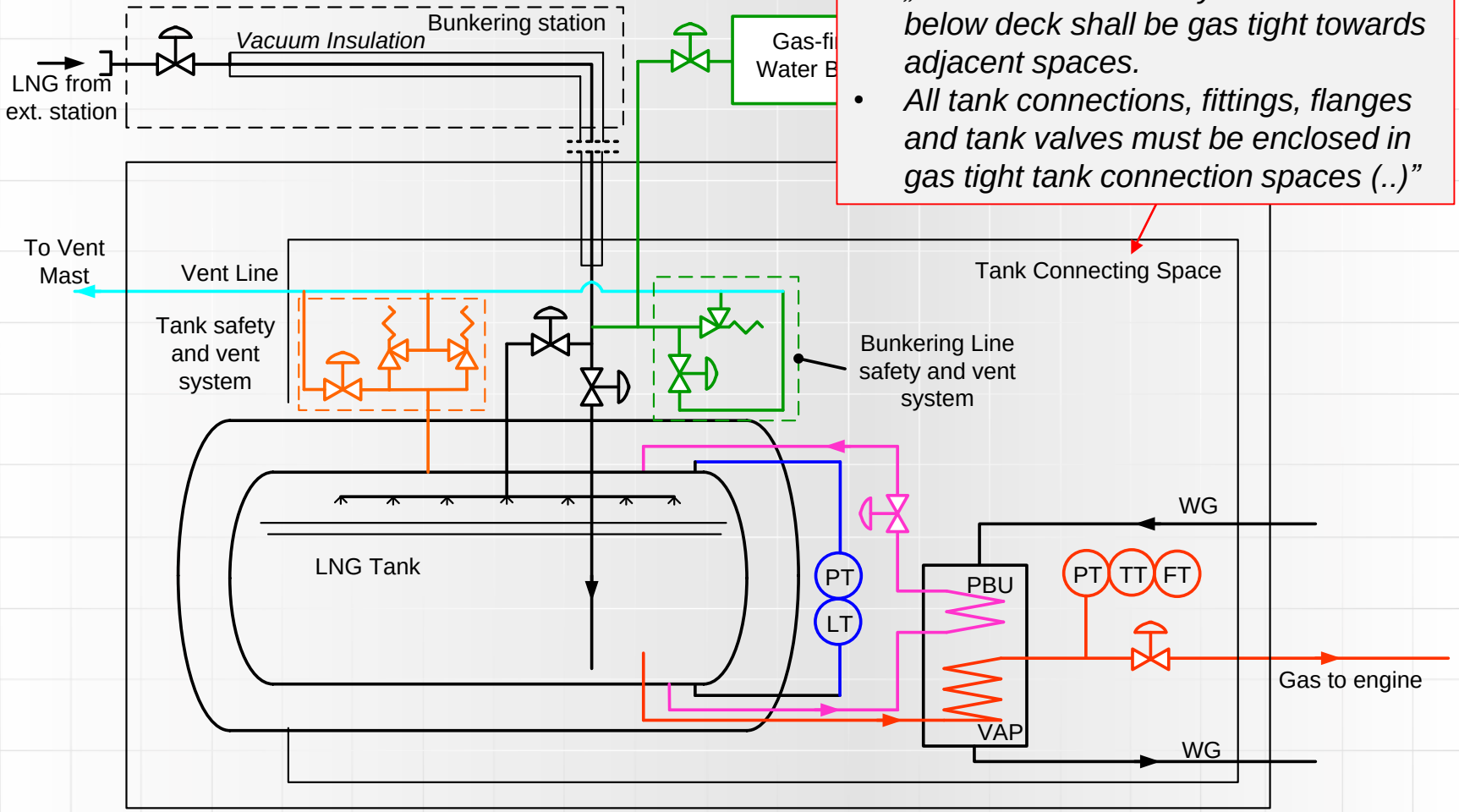

Fuel systems subject to the IGF Code

Fuel containment system

General rules (2/2):

- The material of the bulkheads of the tank connection space shall have a design temperature corresponding with the lowest temperature it can be subject to in a probable maximum leakage scenario. The tank connection space shall be designed to withstand the maximum pressure build up during such a leakage. Alternatively, pressure relief venting to a safe location (mast) can be provided.

- If liquefied gas fuel storage tanks are located on open deck the ship steel shall be protected from potential leakages from tank connections and other sources of leakage by use of drip trays. The material is to have a design temperature corresponding to the temperature of the fuel carried at atmospheric pressure.

- It shall be possible to empty, purge and vent fuel storage tanks with fuel piping systems. Inerting shall be performed with an inert gas prior to venting with dry air to avoid an explosion hazardous atmosphere in tanks and fuel pipes.

Fuel systems subject to the IGF Code

Fuel containment system

Structural strength (1/3):

- The design life of fixed liquefied gas fuel containment system shall not be less than the design life of the ship or 20 years, whichever is greater.
- Liquefied gas fuel containment systems shall be designed in accordance with North Atlantic environmental conditions and relevant long-term sea state scatter diagrams for unrestricted navigation. Less demanding/more restricted environmental conditions, consistent with the expected usage, may be accepted/required by the Administration
- The liquefied gas fuel containment system structural strength shall be assessed against plastic deformation, buckling and fatigue.

Fuel systems subject to the IGF Code

Fuel containment system

Structural strength (2/3):

- Ultimate Design Conditions (during its construction, testing and anticipated use in service)
  - internal pressure;
  - external pressure;
  - dynamic loads due to the motion of the ship in all loading conditions;
  - thermal loads;
  - sloshing loads;
  - loads corresponding to ship deflections;
  - tank and liquefied gas fuel weight with the corresponding reaction in way of supports;
  - insulation weight;
  - loads in way of towers and other attachments; and
  - test loads.

Fuel systems subject to the IGF Code

Fuel containment system

Structural strength (3/3):

- Fatigue Design Conditions
- Accidental Design Conditions
  - Collision

Ship length (L)	Design acceleration (a)
L > 100 m	0,5 g
60 < L ≤ 100 m	$\left(2 - \frac{3(L-60)}{80}\right)g$
L ≤ 60 m	2g

  - Fire
  - Flooded compartment causing buoyancy on tank

Fuel systems subject to the IGF Code

Piping

General rules:

- Fuel pipes and all the other piping needed for a safe and reliable operation and maintenance shall be color marked in accordance with a standard at least equivalent to those acceptable to the Organization.

- Where tanks or piping are separated from the ship's structure by thermal isolation, provision shall be made for electrically bonding to the ship's structure both the piping and the tanks. All gasketed pipe joints and hose connections shall be electrically bonded.

- All pipelines or components which may be isolated in a liquid full condition shall be provided with relief valves.

- Pipework, which may contain low temperature fuel, shall be thermally insulated to an extent which will minimize condensation of moisture.

Fuel systems subject to the IGF Code

Simplified P&ID of Samso Ferry fuel gas system

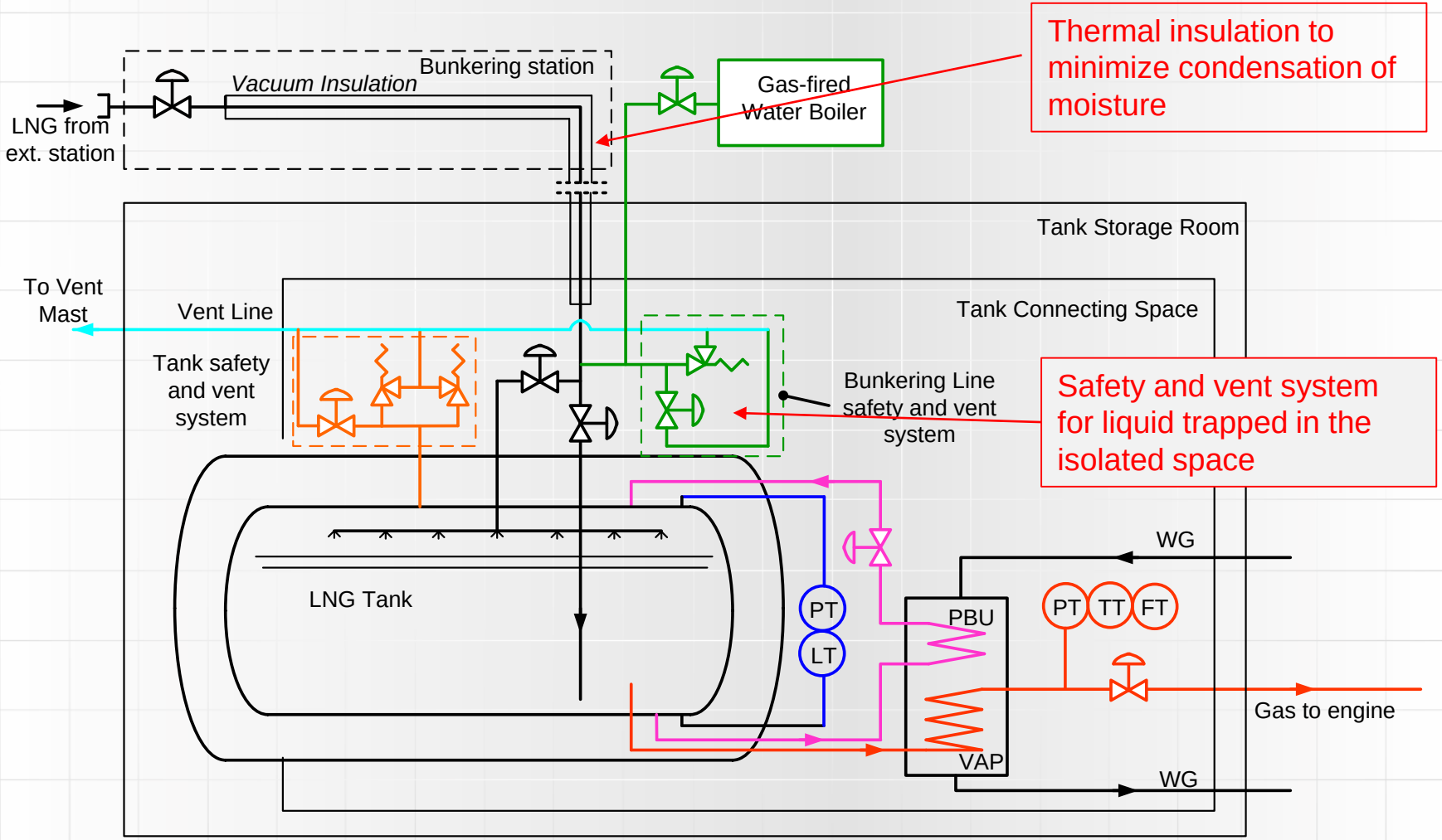

Fuel systems subject to the IGF Code

Piping

Design conditions for pipings:
The greater of the following design conditions shall be used for piping, piping system and components as appropriate:

- for systems or components which may be separated from their relief valves and which contain only vapour at all times, vapour pressure at 45°C assuming an initial condition of saturated vapour in the system at the system operating pressure and temperature; or
- the MARVS of the fuel tanks and fuel processing systems; or
- the pressure setting of the associated pump or compressor discharge relief valve; or
- the maximum total discharge or loading head of the fuel piping system; or
- the relief valve setting on a pipeline system

Piping, piping systems and components shall have a minimum design pressure of 1.0 MPa except for open ended lines where it is not to be less than 0.5 MPa.

IGF Code contains procedure for calculations of min. wall thickness, allowable stresses, determination of material, joints and compensators.

Fuel systems subject to the IGF Code

Bunkering system

Bunkering station:

- The bunkering station shall be located on open deck so that sufficient natural ventilation is provided. Closed or semi-enclosed bunkering stations shall be subject to special consideration within the risk assessment,
- Suitable means shall be provided to relieve the pressure and remove liquid contents from pump suctions and bunker lines. Liquid is to be discharged to the liquefied gas fuel tanks or other suitable location.
- The surrounding hull or deck structures shall not be exposed to unacceptable cooling, in case of leakage of fuel,
- A manually operated stop valve and a remote operated shutdown valve in series, or a combined manually operated and remote valve shall be fitted in every bunkering line close to the connecting point. It shall be possible to operate the remote valve in the control location for bunkering operations and/or from another safe location.

Fuel systems subject to the IGF Code

Bunkering system

LNG Bunkering Master Valve

Nitrogen connection

LNG Vapours Return Connection

LNG Bunkering Connection

Drip Tray

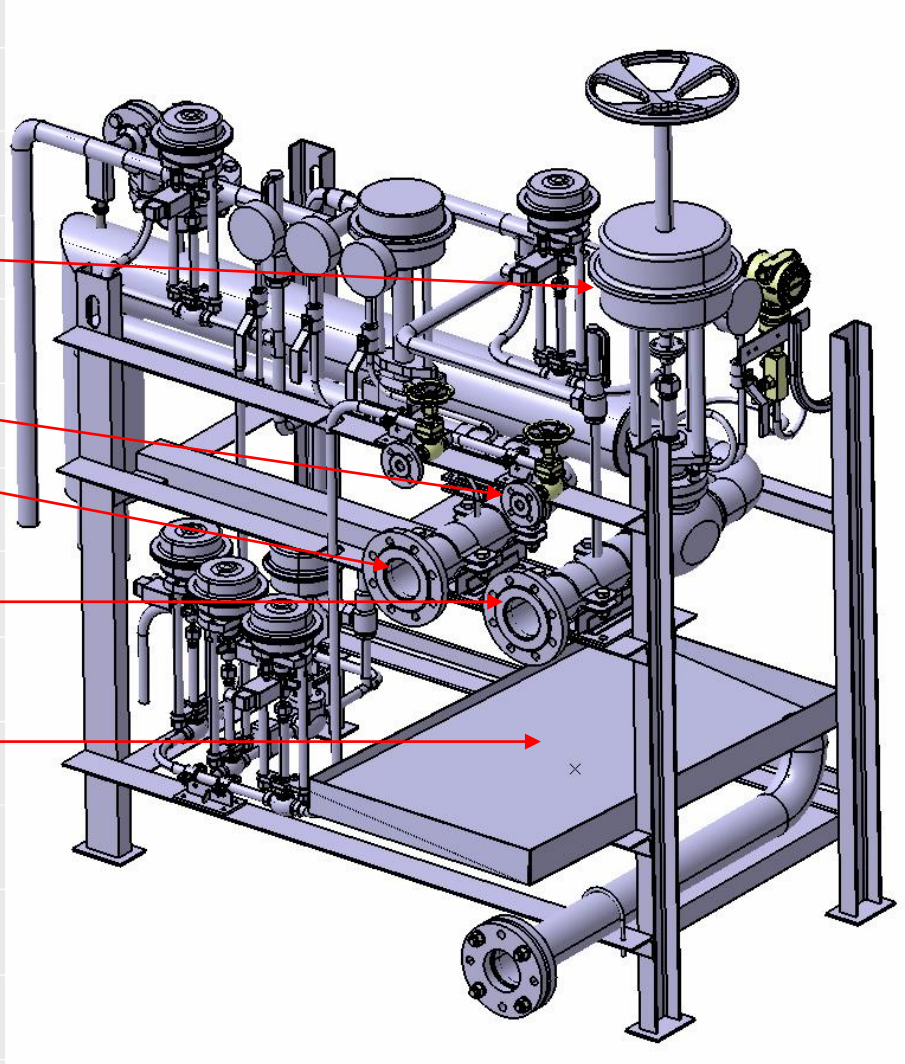

Fuel systems subject to the IGF Code

Ventilation

Each of the following hazardous spaces shall be mechanical ventilated:

- Tank connection space - capacity of at least 30 air changes per hour
- Machinery spaces - capacity of at least 30 air changes per hour
- Fuel preparation rooms - capacity of at least 30 air changes per hour
- Bunkering stations –If natural ventilation is not sufficient, mechanical ventilation shall be provided,
- Ducts and double pipes containing fuel piping- capacity of at least 30 air changes per hour. The ventilation system for double piping and for gas valve unit spaces in gas safe engine-rooms shall be independent of all other ventilation systems.

Any ducting used for the ventilation of hazardous spaces shall be separate from that used for the ventilation of non-hazardous spaces.

Fuel systems subject to the IGF Code

Pressure relief systems

General rules:

- All fuel storage tanks shall be provided with a pressure relief system appropriate to the design of the fuel containment system and the fuel being carried.
- Pressure control systems shall be independent of the pressure relief systems
- Liquefied gas fuel tanks shall be fitted with a minimum of 2 pressure relief valves (PRVs) allowing for disconnection of one PRV in case of malfunction or leakage.
- The setting of the PRVs shall not be higher than the vapour pressure that has been used in the design of the tank.
- Valves comprising not more than 50% of the total relieving capacity may be set at a pressure up to 5% above MARVS to allow sequential lifting, minimizing unnecessary release of vapour.

Fuel systems subject to the IGF Code

Simplified P&ID of Samso Ferry fuel gas system

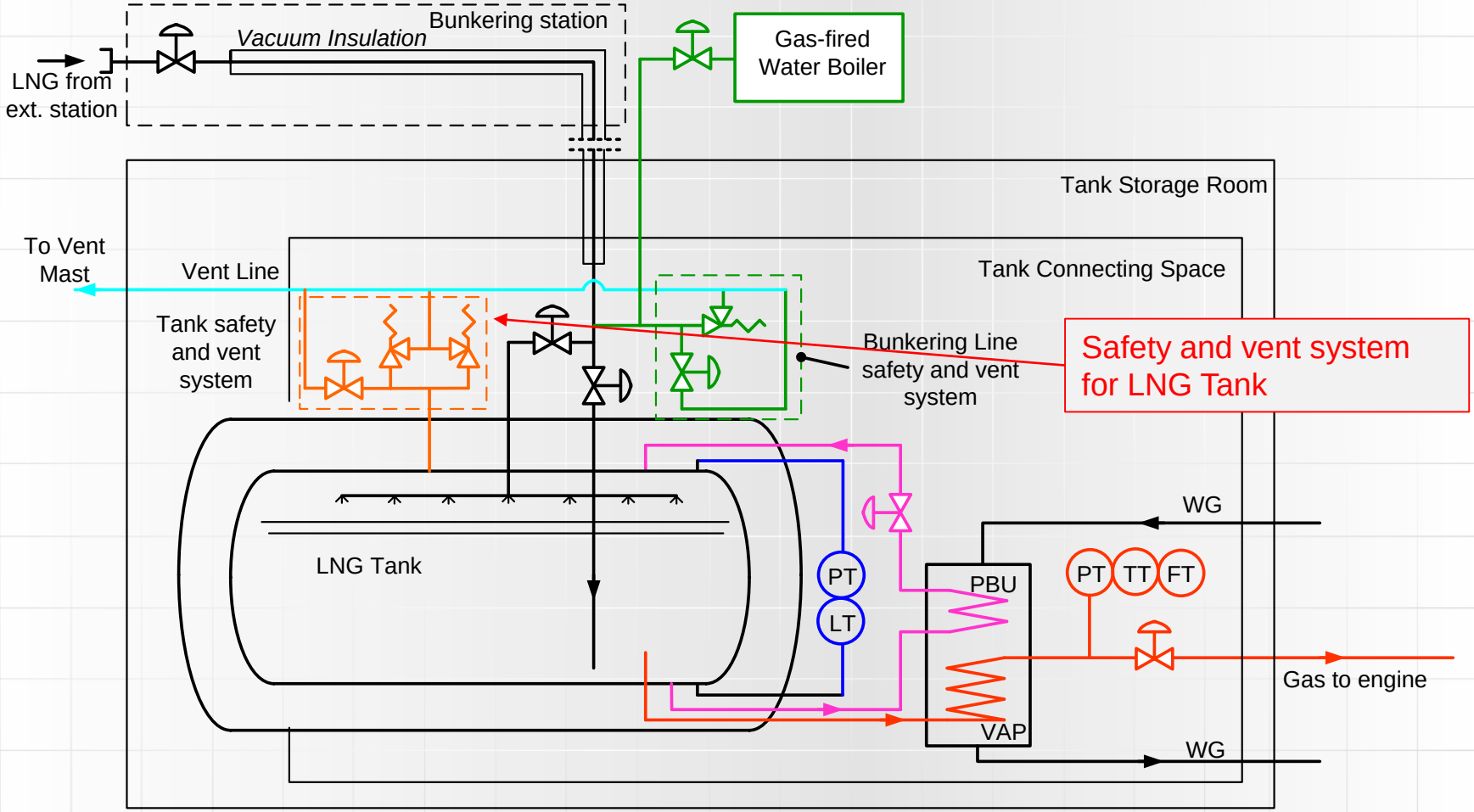

Fuel systems subject to the IGF Code

Pressure relief systems

Sizing of relieving valves:

Safety valve capacity

$$Q_{GCC} = FGA^{0.82}$$

Q_{GCC} - minimum required rate of discharge of air at standard conditions of 273 K and 1.013 bar, m^3/s;
F - fire exposure factor
A - external area of the tank;
G - gas factor:

$$G = \frac{12.4}{LD}\sqrt{\frac{ZT}{M}}$$

T - temperature in Kelvin (K) at relieving conditions, i.e. 120% of the pressure at which the pressure relief valve is set
L - latent heat of the product being vaporised at relieving conditions (kJ/kg)
Z - compressibility factor of the gas at relieving conditions. If not known, Z = 1.0 should be used.
M - molecular mass of the product
D - constant based on relation of specific heats (k), for methane *D*=0.665

Fuel systems subject to the IGF Code

Pressure relief systems

Sizing of relieving valves:

Fire exposure factor

F = 1.0 for tanks without insulation located on deck;

F = 0.5 for tanks above the deck when insulation is approved by the Administration, based on the use of a fireproofing material, the thermal conductance of insulation, and its stabilityunder fire exposure;

F = 0.5 for uninsulated independent tanks installed in holds;

F = 0.2 for insulated independent tanks in holds (or uninsulated independent tanks in insulated holds);

F = 0.1 for insulated independent tanks in inerted holds (or uninsulated independent tanks in inerted, insulated holds);

F = 0.1 for membrane tanks.

Fuel systems subject to the IGF Code

Pressure relief systems

Sizing of vent pipe system:

The pressure drop in the vent line from the tank to the PRV inlet shall not exceed 3% of the valve set pressure at the calculated flow rate.

The built-up back pressure in the vent piping from the PRV outlet to the location of discharge to the atmosphere, and including any vent pipe interconnections that join other tanks, shall not exceed the following values:

- for unbalanced PRVs: 10% of MARVS;
- for balanced PRVs: 30% of MARVS; and
- for pilot operated PRVs: 50% of MARVS

III. Fuel storage systems operation on board ships subject to the IGF Code

Fuel storage systems operation

Fuel Gas System operation modes

Gas Supply to Engines

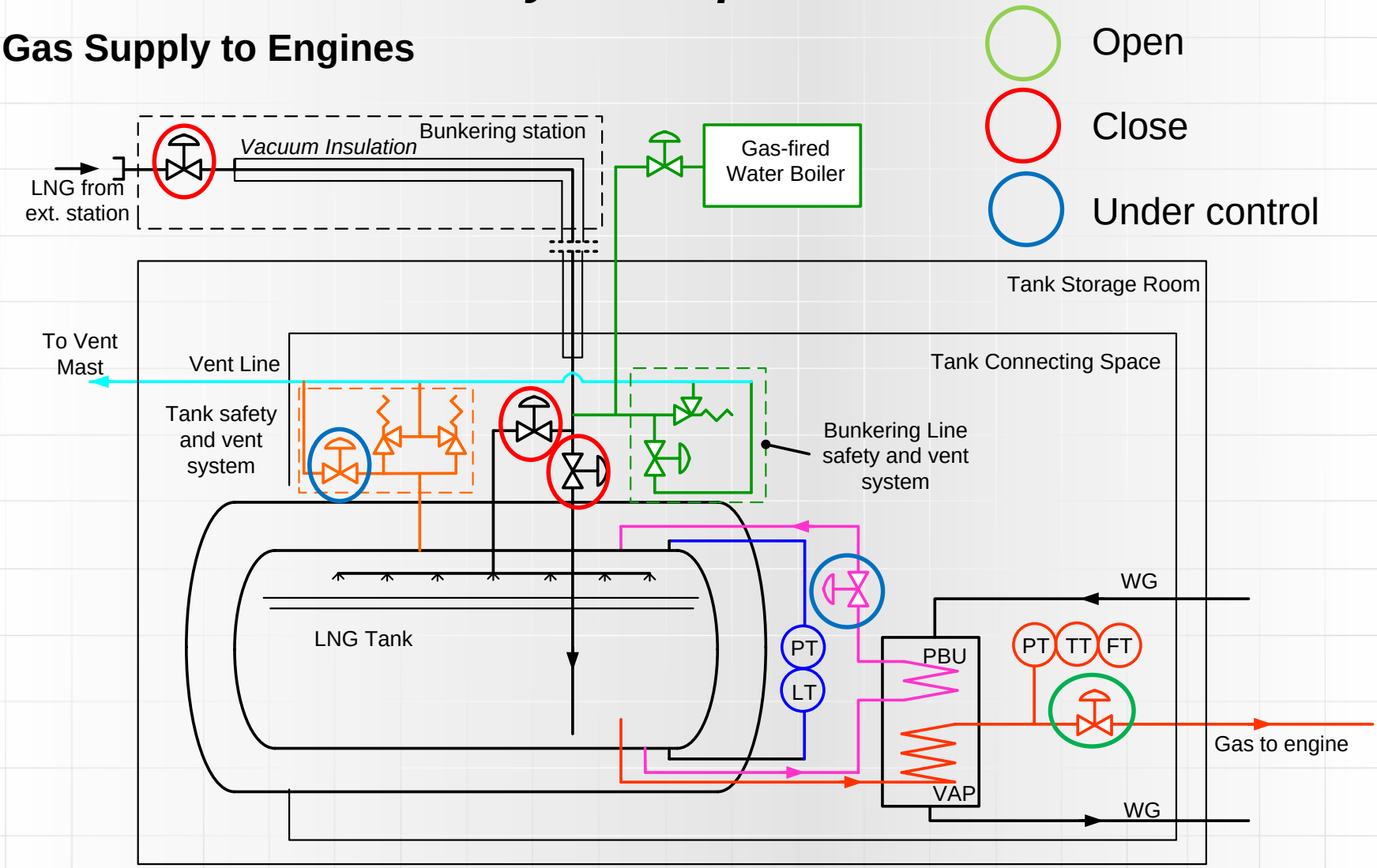

Fuel storage systems operation

Fuel Gas System operation modes

LNG Tank Bunkering

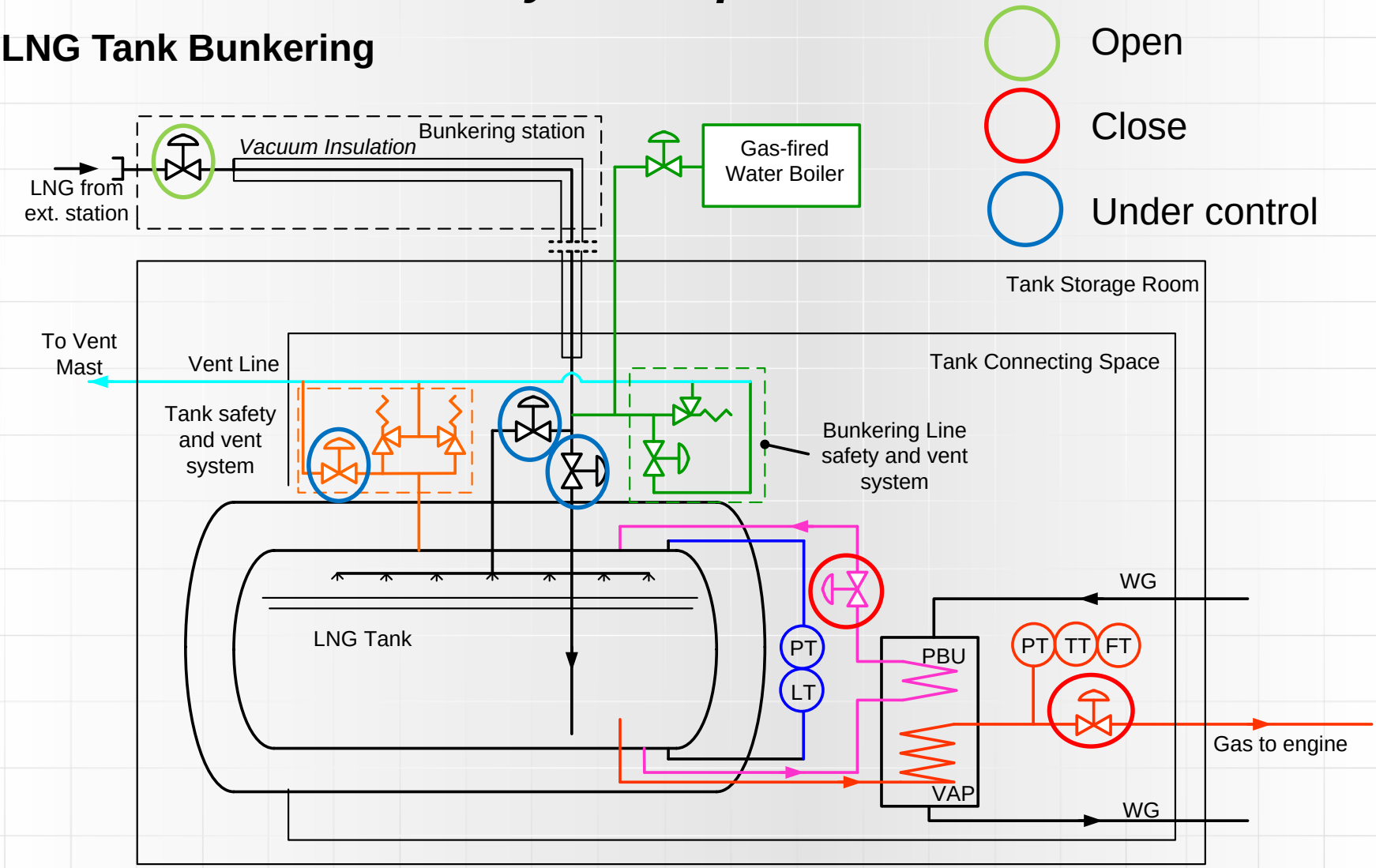

Fuel storage systems operation

Fuel Gas System operation modes

System Stand-By

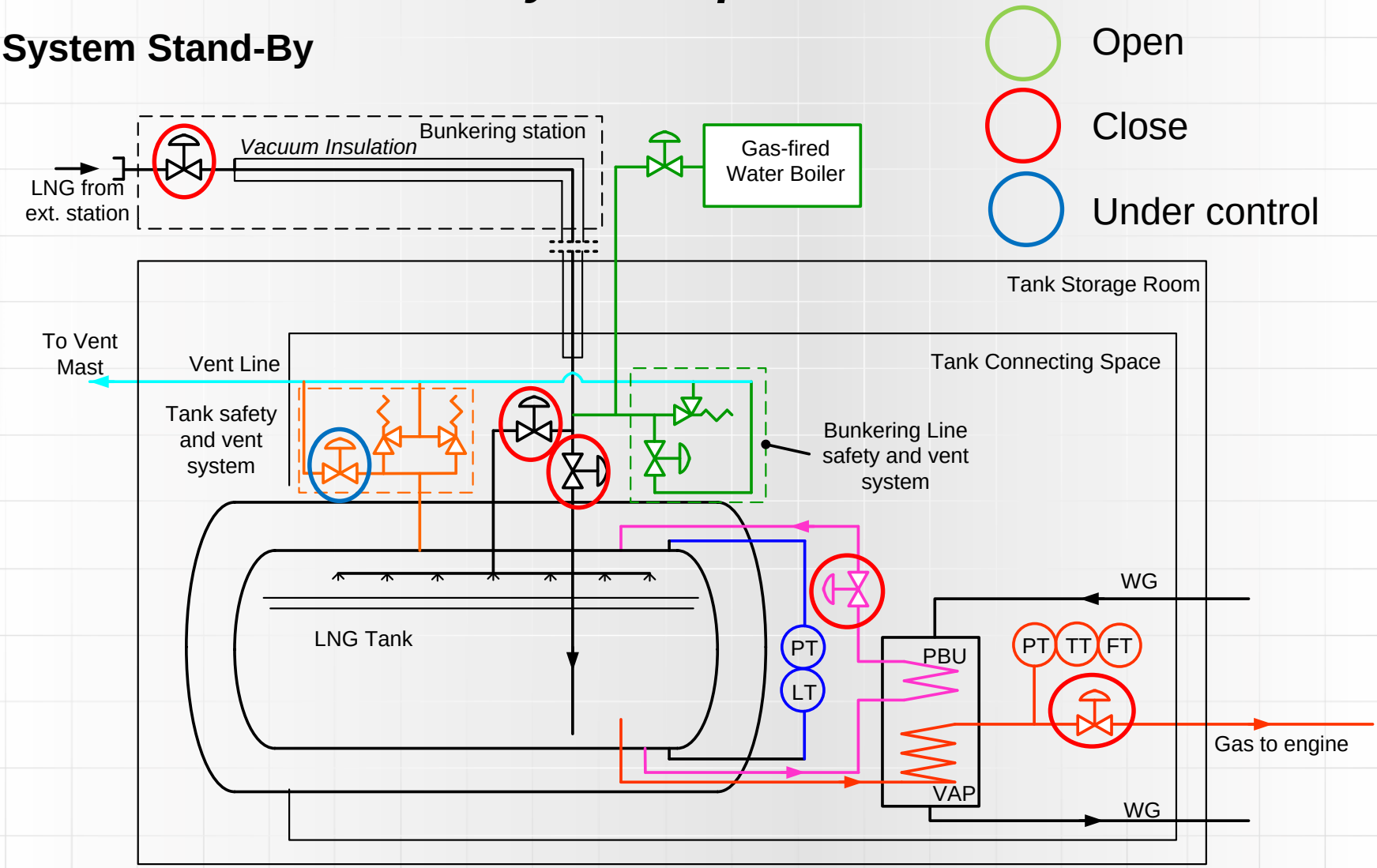

Fuel storage systems operation

Control, monitoring and safety system

Bunkering and liquefied gas fuel tank monitoring

- Each liquefied gas fuel tank shall be fitted with liquid level gauging device:
    - indirect devices, such as weighing or in-line flow metering
    - closed devices, which do not penetrate the liquefied gas fuel tank, such as devices using radio-isotopes or ultrasonic devices
- Each liquefied gas fuel tank shall be fitted with a high liquid level alarm operating independently of other liquid level indicators and giving an audible and visual warning when activated.
- An additional sensor operating independently of the high liquid level alarm shall automatically actuate a shutoff valve in a manner that will both avoid excessive liquid pressure in the bunkering line and prevent the liquefied gas fuel tank from becoming liquid full

Fuel storage systems operation

Control, monitoring and safety system

Bunkering and liquefied gas fuel tank monitoring

- The vapour space of each liquefied gas fuel tank shall be provided with a direct reading gauge. Additionally, an indirect indication is to be provided on the navigation bridge, continuously manned central control station or onboard safety centre
- The pressure indicators shall be clearly marked with the highest and lowest pressure permitted in the liquefied gas fuel tank.
- A high-pressure alarm and, if vacuum protection is required, a low-pressure alarm shall be provided on the navigation bridge and at a continuously manned central control station or onboard safety centre. Alarms shall be activated before the set pressures of the safety valves are reached.
- Each fuel pump discharge line and each liquid and vapour fuel manifold shall be provided with at least one local pressure indicator.
- Local-reading manifold pressure indicator shall be provided to indicate the pressure between ship's manifold valves and hose connections to the shore.

Fuel storage systems operation

Control, monitoring and safety system

Control of tank pressure and temperature

Liquefied gas fuel tanks' pressure and temperature shall be maintained at all times within their design range by one of the following methods:

1. Reliquefaction of vapours;
2. Thermal oxidation of vapours;
3. Pressure accumulation; or
4. Liquefied gas fuel cooling.

The method chosen shall be capable of maintaining tank pressure below the set pressure of the tank pressure relief valves for a period of 15 days assuming full tank at normal service pressure and the ship in idle condition, i.e. only power for domestic load is generated.

Venting of fuel vapour for control of the tank pressure is not acceptable except in emergency situations.

Fuel storage systems operation

Simplified P&ID of Samso Ferry fuel gas system

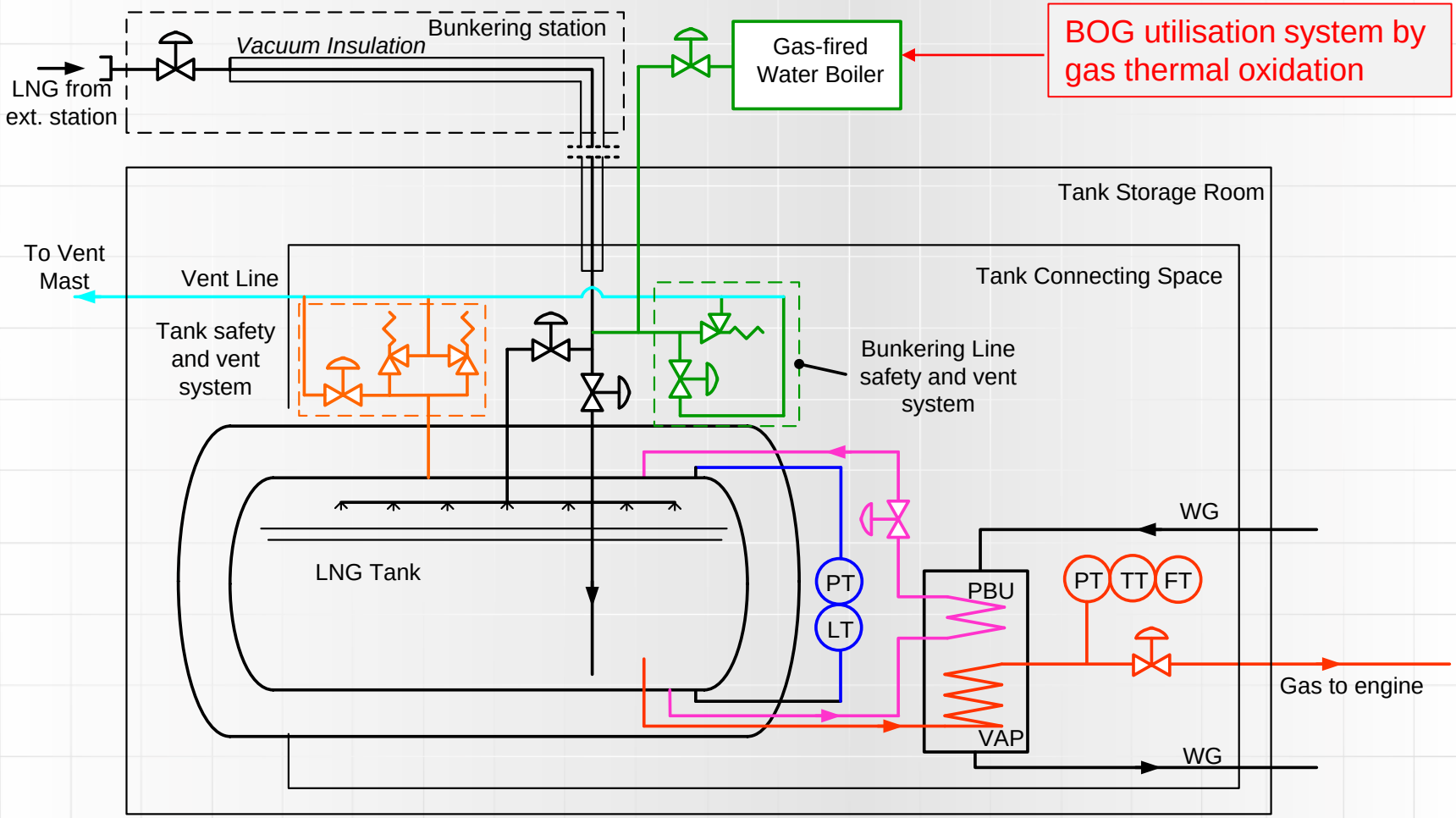

Fuel storage systems operation

Bunkering system

Bunkering control:

- Control of the bunkering shall be possible from a safe location remote from the bunkering station.
- At this location the tank pressure, tank temperature (if required) and tank level shall be monitored.
- Remotely controlled valve shall be capable of being operated from this location.
- Overfill alarm and automatic shutdown shall also be indicated at this location.

Fuel storage systems operation

Bunkering system

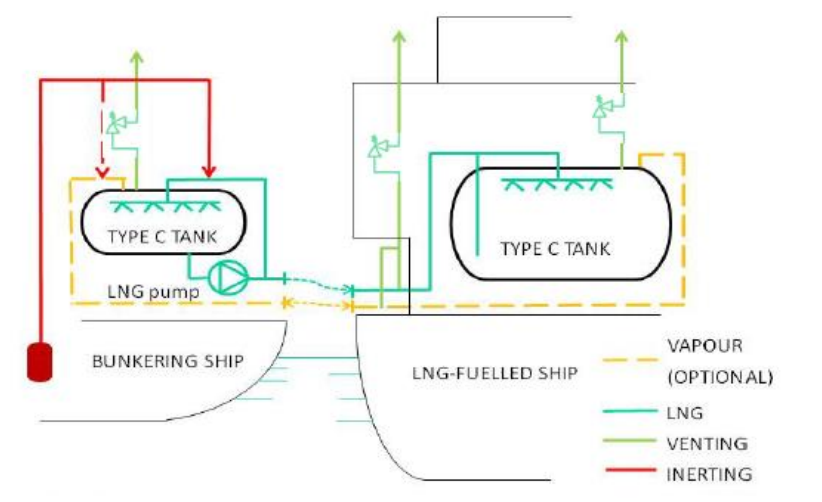

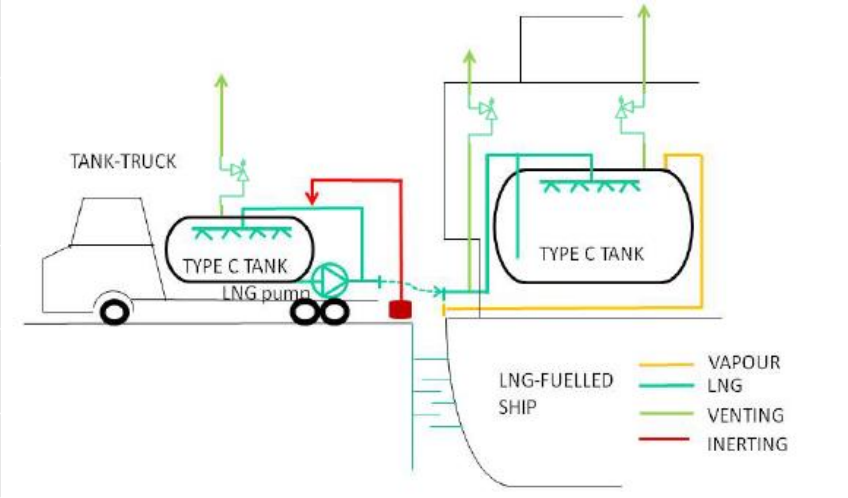

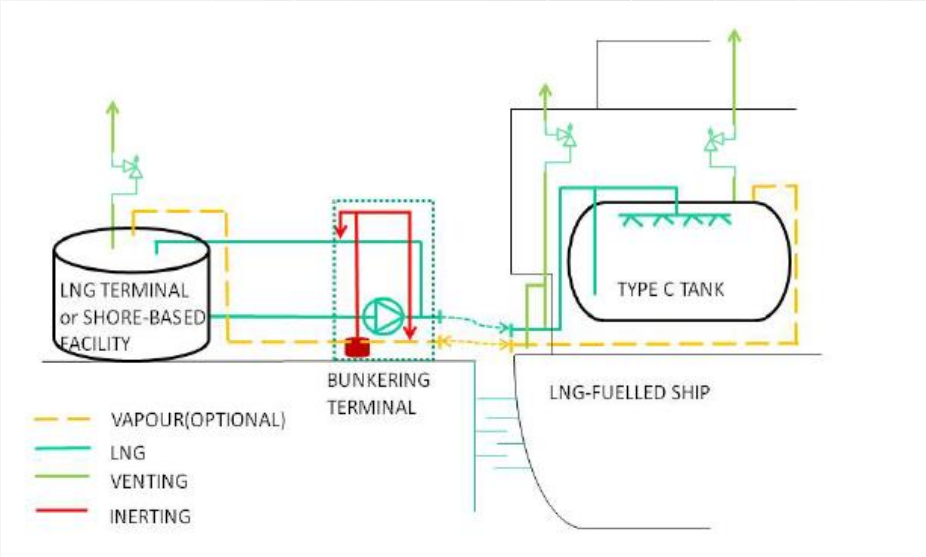

Fuel storage systems operation

Control, monitoring and safety system

Gas detection

Permanently installed gas detectors shall be fitted in:

- the tank connection spaces;
- all ducts around fuel pipes;
- machinery spaces containing gas piping, gas equipment or gas consumers;
- compressor rooms and fuel preparation rooms;
- other enclosed spaces containing fuel piping or other fuel equipment without ducting;
- other enclosed or semi-enclosed spaces where fuel vapours may accumulate
- airlocks;
- gas heating circuit expansion tanks;
- motor rooms associated with the fuel systems; and
- at ventilation inlets to accommodation and machinery spaces if required based on the risk assessment
- In each ESD-protected machinery space, redundant gas detection systems shall be provided.

Fuel storage systems operation

Preventing cryogenics accidents

Dos:

- Do wear goggles, cryogenic gloves, and loose-fitting ets when handling cryogenic liquids.
- Do read the MSDS that comes with the cryogen
- Do transport cryogenic liquids in containers approved for such use
- Do avoid activities that will cause splashing of the liquid
- Do use cryogens in wel-ventilated areas
- Do cover Dewars (cryogenic tanks) to prevent liquid oxygen buildup
- Do proper insulate cold areas and tips

Don’ts:

- Do not enclose cryogenic liquids without a vent
- Do not use large quantities of cryogenics liquid without proper ventilation
- Do not close tight Dewars

Thank you for your attention!

Contact details:

dr inż. Jarosław Poliński
jaroslaw.polinski@pwr.edu.pl

mgr inż. Maciej Dziewiecki
maciej.dziewiecki@pwr.edu.pl

Department of Cryogenic, Aeronautical and Process Engineering (W9/K1);

Faculty of Mechanical and Power Engineering;

Wroclaw University of Science and Technology;

Wybrzeże Wyspianskiego Street 27

50-370 Wrocław, Poland