nærenergi

Biogas Liquefaction Technology Workshop
13.6.2017
Samsø Energy Academy

Jacob Himmelstrup
CEO, Nærenergi Danmark A/S
+45 2427 9704
jacob.himmelstrup@narenergi.dk

nærenergi

Maximizing output from the biogas circuit

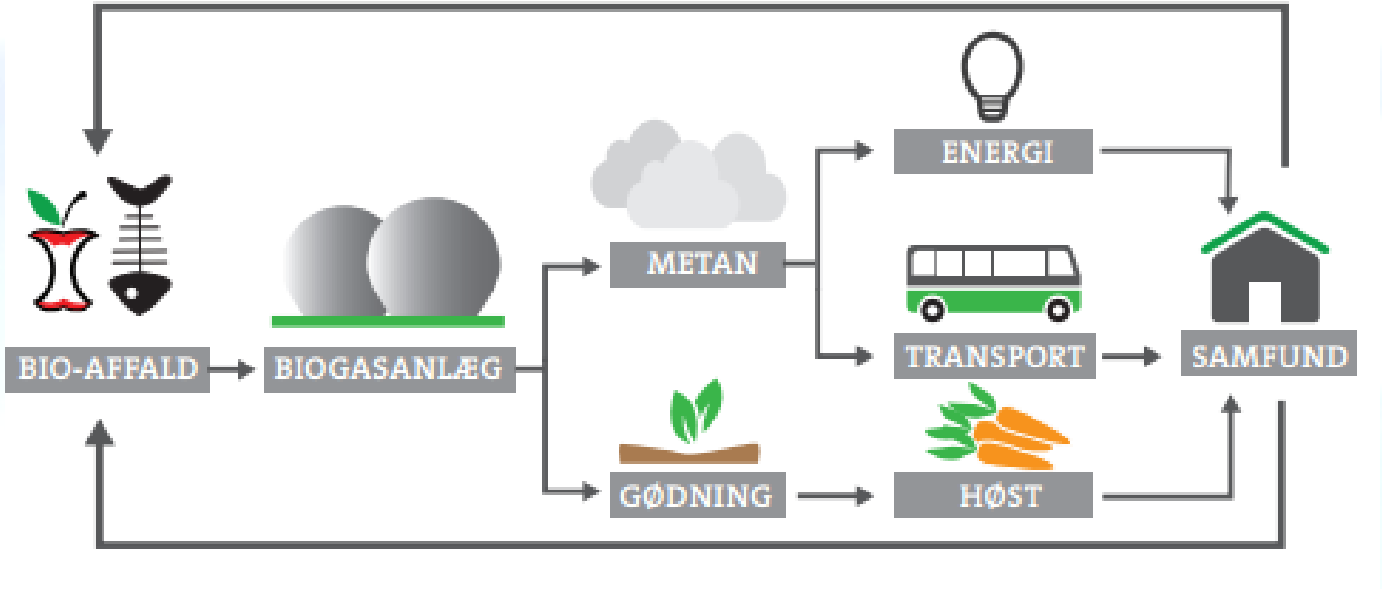

nærenergi

Local bioenergy solutions from Nærenergi

- Local focus: Bioenergy plants, nordic market.
- Offices in Copenhagen, Haugesund and Stavanger
- More than 10 years biogas experience
- 22 dedicated employees
- Strong track record and positive financial development

nærenergi

- **Business segments:**
  - Biogas plants and equipment
  - Biogas upgrading plants
  - Liquification of biogas
  - Refuelling stations CNG, CBG
  - LPG distribution and –systems
  - District heating plants and –operation
  - Biofuelled heating and cogeneration

Liquid Biomethane - LBM

GALILEO

Natural Gas Technologies

Overview LBM – Liquid Biomethane

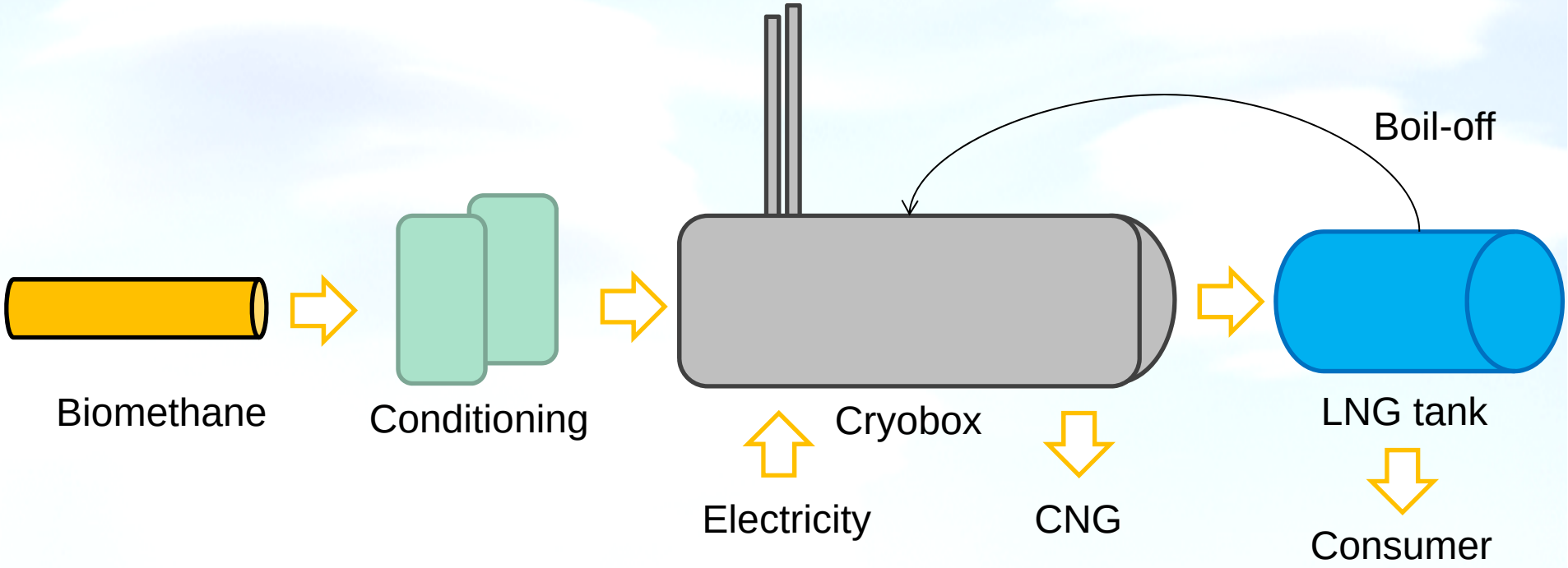

How it works?

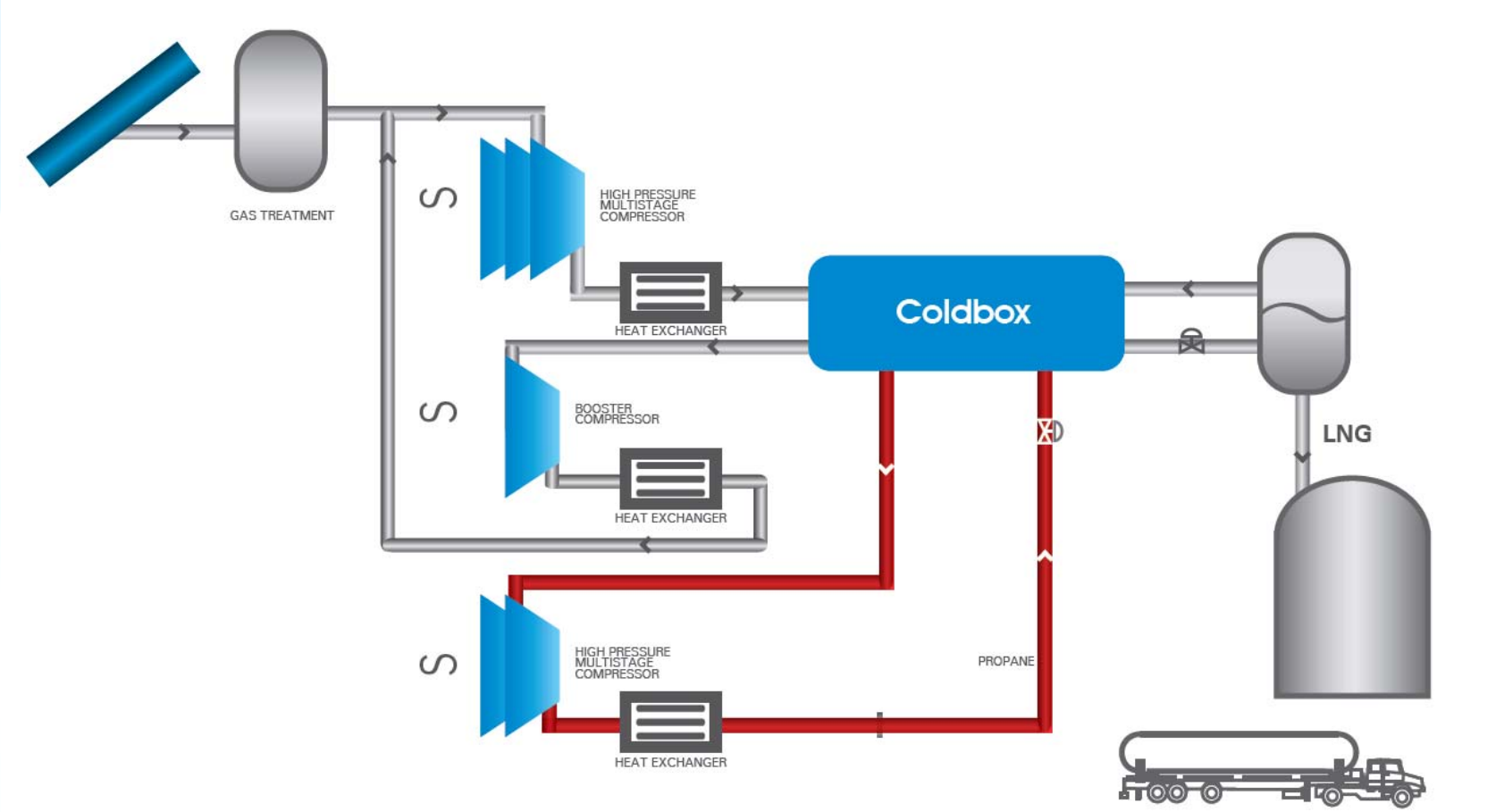
GAS TREATMENT
HIGH PRESSURE MULTISTAGE COMPRESSOR
HEAT EXCHANGER
Coldbox
BOOSTER COMPRESSOR
HEAT EXCHANGER
LNG
HIGH PRESSURE MULTISTAGE COMPRESSOR
PROPANE
HEAT EXCHANGER

nærenergi

Cryobox – Small scale LBM production and storage

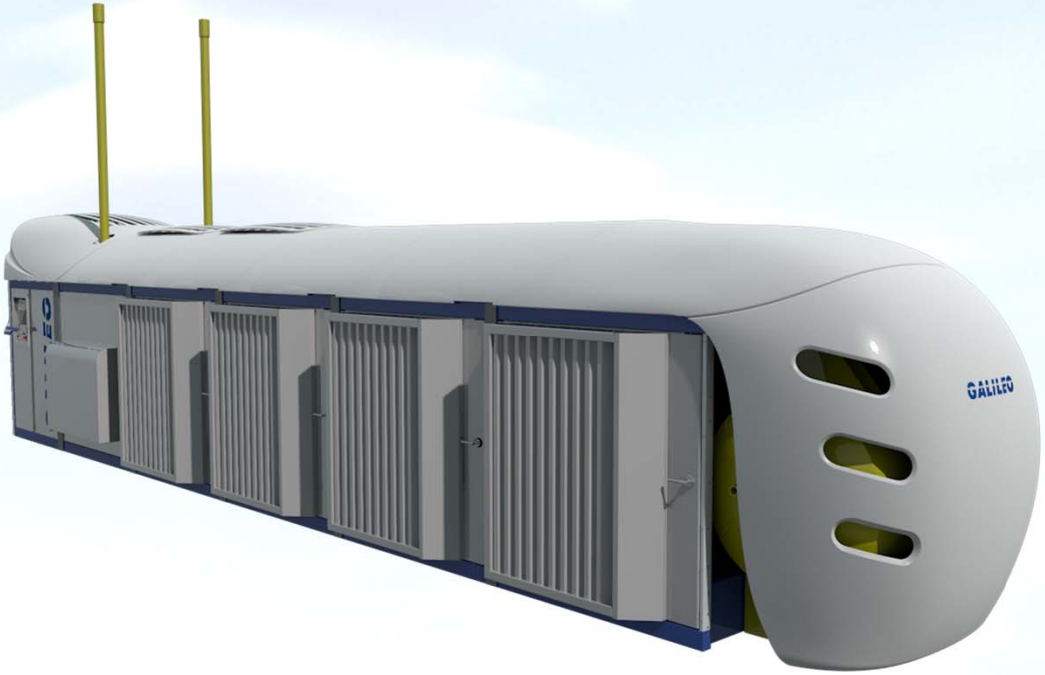

Cryobox – Advantages

Containerised design Easy to install and relocate. From order to commisioning in only 6-7 months.	Fast startup, without energy losses or inefficiencies, the maximum production level is reached in only 10 minutes. A clear advantage when compared to medium or large-sized plants which require 12 to 18 hours to start production.	Boil-off gas is captured and recirculated within the Cryobox

LBM Production

	Cryobox 500/600	Cryobox 200	
Inlet pressure	4-15	12-15	Bar g
LBM output	520-660 12-16	170-200 4-4,5	Kg/h Ton/day
Installed power	450-550	132	KW
Driver	Electric Motor	Electric Motor	
Relative powerconsumption (Depending on inlet pressure)	0,66 – 0,85		kWh/Kg LBM

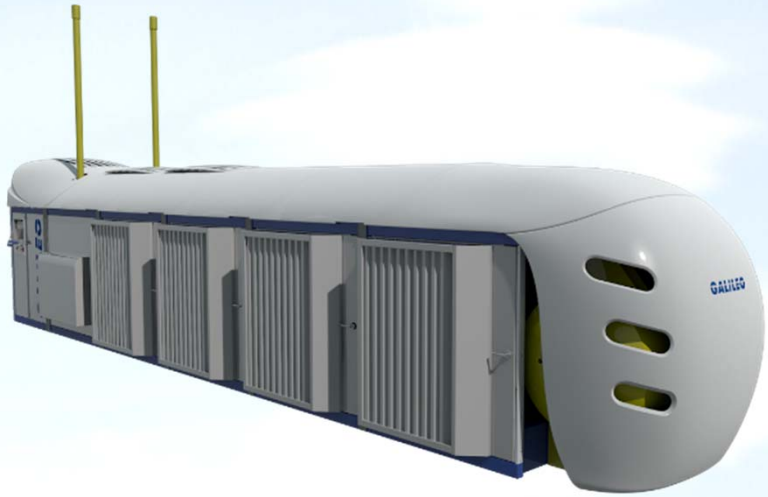

LBM Storage

	CNX 1500	CNX 2000	
LCNG production Capacity	21	21	Sm3/min
LNG Pumping Capacity	60	60	Kg/min
Storage Capacity (Internal)	5500	8500	Liters LBM
Driver	Electric Motor	Electric Motor	
Installed Power	37	37	KW

Success Cases Galileo

nærenergi

Cryobox® Nano LNG-Station bringing LNG to the service of transport

Galileo have created Cryobox®, the first Nano LNG-Station that has brought LNG to the transport industry. Seven Cryobox® units supply LNG to the "Francisco", the first high-speed ferry powered by LNG fueled turbines.

Transforming the problem of flaring into an opportunity

In Bakken, North Dakota, Galileo integrated flare gas capture and liquefied natural gas LNG production right at the wellhead. Thus, LNG can be transported and consumed as a fuel for drill-rig power generation and frac-water heating.

nærenergi

GALILEO Cryobox references

More than 25 plants put into operation worldwide over last 4 years

Virtual Pipeline simulation

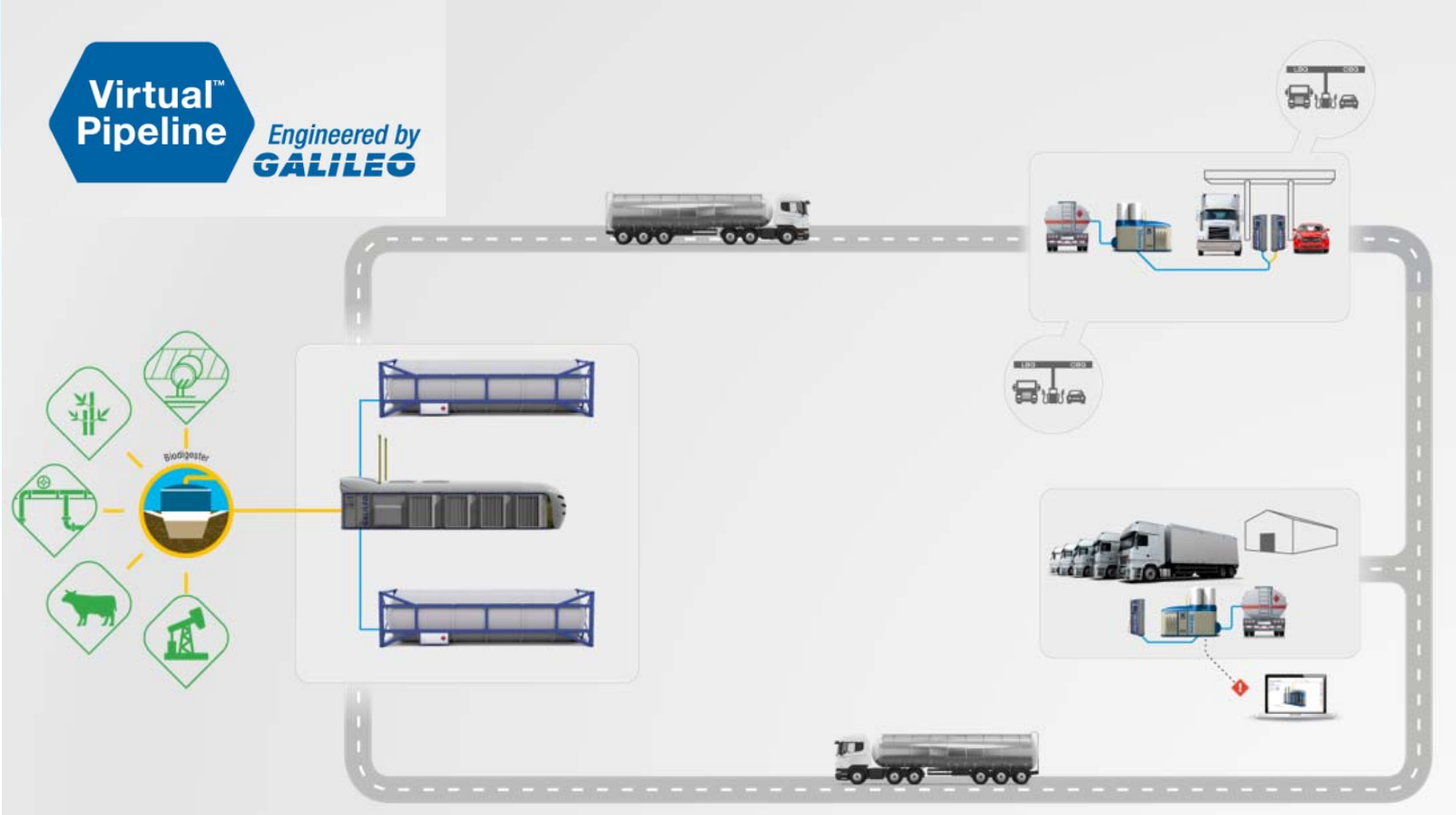

Nordic opportunities?

- Looking to establish first reference in Scandinavia
- Open for discussion about ownership of station
  - Galileo Rental would be interested in supply of station under fixed rental agreement/liquefaction agreement
- Please do not hesitate to contact us for more information
- Thanks for your interest!

Jacob Himmelstrup
CEO, Nærenergi Danmark A/S
+45 2427 9704
jacob.himmelstrup@narenergi.dk