MT LNG

# WP4 component

Study visit

17-19 September 2013, Stavanger

Part-financed by the European Union
(European Regional Development Fund)

South Baltic PROGRAMME

# Aims

- Indicate lack of the competences within the industry
- Build LNG related competences for the industry
- Facilitate cluster development by organizing cooperation through learning

Part-financed by the European Union
(European Regional Development Fund)

# Training methodology

- List of the missing competences
- Training methodology targeting the missing competence list

Part-financed by the European Union
(European Regional Development Fund)

# The scope of training – final

1. LNG as a business opportunities
2. LNG technology
3. Maritime LNG training

Part-financed by the European Union
(European Regional Development Fund)

# LNG as a business opportunities

| | Topic | Customer | Customer expectations | Project expectations | Format of implementation process |
|---|---|---|---|---|---|
| 1. | About LNG<br>LNG economic<br>LNG praising<br>LNG promotion<br>LNG Project management<br>LNG supply chain development/demand<br>Legislation | Port authorities, government (Maritime) authorities, shipping companies, shore industries, terminal operators<br>Associated organizations | Business opportunities, knowledge, expertise, analyses and linkage | Foster LNG business, facilities for LNG ideas | Lectures, discussions, B2B, social, |

# LNG technology

| | Topic | Customer | Customer expectations | Project expectations | Format of implementation process |
|---|---|---|---|---|---|
| **2.** | LNG technology<br>LNG infrastructure<br>LNG Shipping<br>LNG Supply procurement | SMEs<br>Universities,<br>entrepreneurs<br>OEMs(end product suppliers) | Competence, knowledge, certificate, Bussines opportunities, cooperations | People with relevant knowledge level, cooperations, contracts, projects | Workshop, discussions, social, b2b, |

Part-financed by the European Union
(European Regional Development Fund)

# Maritime LNG training

| | Topic | Customer | Customer expectations | Project expectations | Format of implementation process |
|---|---|---|---|---|---|
| **3.** | Basic maritime LNG training<br>Navigation<br>Technical operation<br>Safety and Security | Pilots, tug's crews, crews of LNG carriers, crews of LNG powered vessels, | Competence, knowledge, certificate | People with relevant knowledge level | Simulator training, specialized first aid course |

Part-financed by the European Union
(European Regional Development Fund)

# Maritime LNG training structure

- Prepared by KSRC and MUS
- Duration: 2 days
- Theoretical and practical (mobile simulator)

Part-financed by the European Union
(European Regional Development Fund)

# Maritime LNG training content

*The first day*

| | |
|---|---|
| 1.LNG – general knowledge | 2 hours |
| *Practical part* | |
| 2.Ship's steering – principles | 2 hours |
| 3.Hydro-meteorological influences | 1 hour |
| 4.LNG carrier and tugs cooperation | 2 hours |
| 5.Emergency situations | 1 hour |
| Total: | 8 hours |

Part-financed by the European Union
(European Regional Development Fund)

# Maritime LNG training content

*The second day*

| | | |
|---|---|---|
| 1. | LNG fuel tank operations | 3 hours |
| 2. | Safe practices procedures | 2 hours |
| 3. | Emergency procedures | 3 hours |
| | Total: | 8 hours |

Part-financed by the European Union
(European Regional Development Fund)

# LNG – general knowledge

1. Origin of natural gas
2. The natural gas composition
3. Physics of natural gas
4. Gas rules
5. Methods of natural gas liquefaction and treatment process
6. Methods of regasification

Part-financed by the European Union
(European Regional Development Fund)

# LNG fuel tank operations

- LNG operations – sequence
  - Prior delivery from yard or departure from dry-dock
  - Preparation for loading / bunkering
  - Loading / bunkering LNG
  - Preparation of tanks for dry-docking

Part-financed by the European Union
(European Regional Development Fund)

# LNG fuel tank operations

- Final inspection
  - Understand the requirements for „cleanlineses” of cargo tanks
  - Detail items checked during „final inspection”

Part-financed by the European Union
(European Regional Development Fund)

# LNG fuel tank operations

- Purging / Gassing up operations
  - Understand the requirements for cargo tanks purging / gassing up
  - Outline the methods for purging/ gassing operations
  - Use of correct method to line up ship / shore of LNG vapour supplay, pipelines for purging / gassing up operations
  - Monitor the purging / gassing up operation and relevant parameters from take off values to the end

Part-financed by the European Union
(European Regional Development Fund)

# LNG fuel tank operations

- Cool down fuel tanks
  - Requirements and methods for tank cool-down operations
  - Understand how the LNG liquid when sprayed in the tanks is able to effectively cool down the tanks
  - Monitor shore supply pressure and take appropriate action on cool down rate and the tank pressure
  - Monitor the cool-down operation and relevant parameters

Part-financed by the European Union
(European Regional Development Fund)

# Safe practice procedure

- Atmosphere evaluation in potential hazardous areas
- Atmosphere evaluation in LNG fuel compartment adjacent spaces
- Atmosphere evaluation before entering enclosed spaces
- Atmosphere evaluation in accommodation areas
- Atmosphere evaluation in spaces above LNG fuel tanks and systems compartments
- Atmosphere control procedures in accommodation spaces in case of LNG fuel gas uncontrolled release
- Atmosphere control procedures in accommodation spaces in case of LNG fuel gas controlled pressure release

Part-financed by the European Union
(European Regional Development Fund)

# Emergency procedures

- Principal hazards familiarization
- Fire protection and fire extinguishing
- Sprinkling firefighting systems on DF-DE vessels
- Dry-Powder firefighting systems on DF-DE vessels
- LNG Firefighting techniques

Part-financed by the European Union
(European Regional Development Fund)

# Maritime LNG training

- Training timeline

| | | |
|---|---|---|
| 1 | 14-15th October | Poland, Szczecin |
| 2 | 21-22nd October | Lithuania, Klaipeda |
| 3 | 18-19th November 2013 | Germany, Rostock |
| 4 | January 2014 | Sweden, Karlshamn |
| 5 | February 2014 | Denmark, Koge |

Part-financed by the European Union
(European Regional Development Fund)

# SHIPS STEERING (BASIC INFORMATION)

- **PROBLEM**
- **Mechanism (why, which way - forces, moments,...)**
- **Process quality evaluation (evaluation accuracy)**
- **Using information (implementation)**

Part-financed by the European Union
(European Regional Development Fund)

# RUDDER

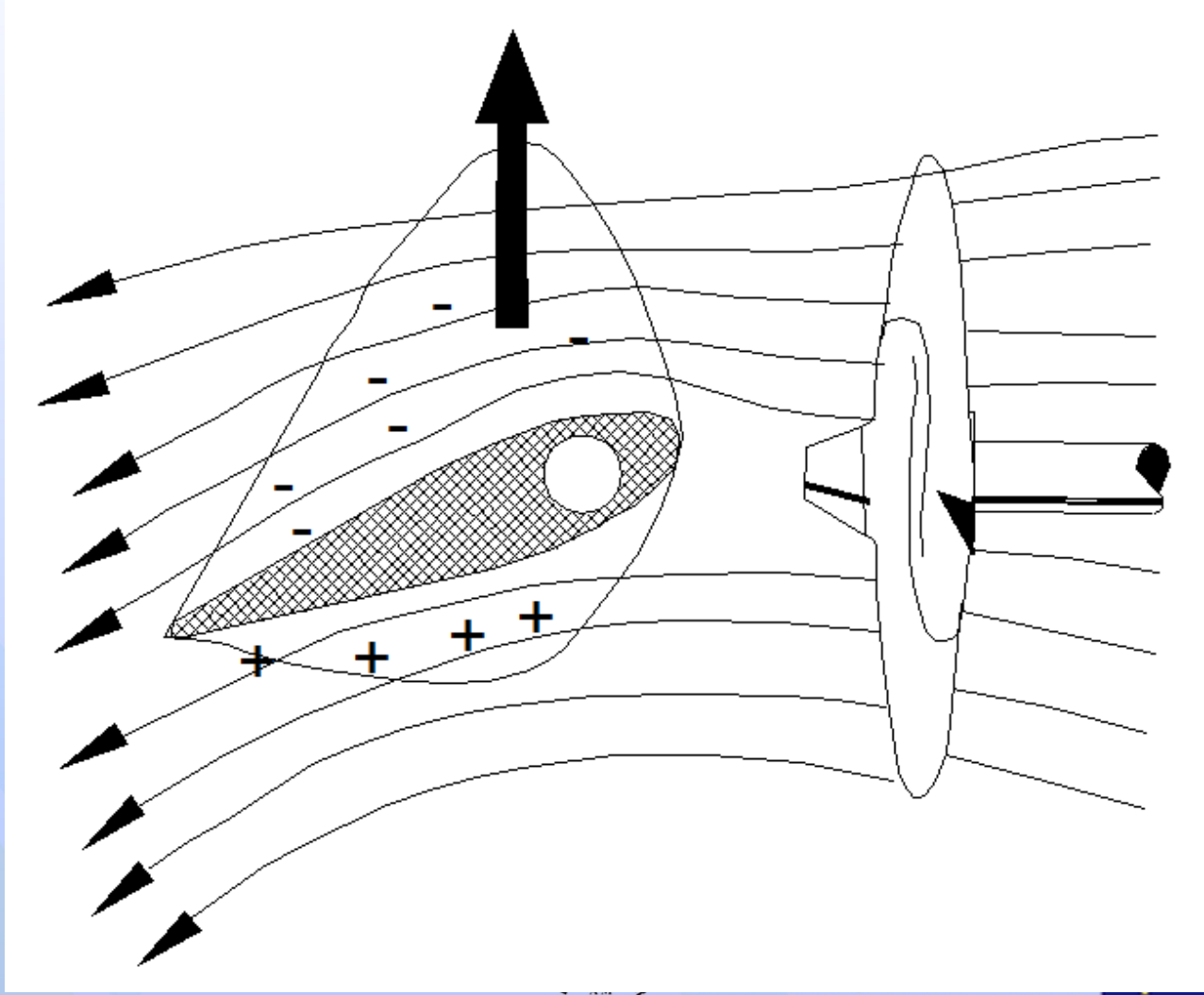

# THRUSTERS

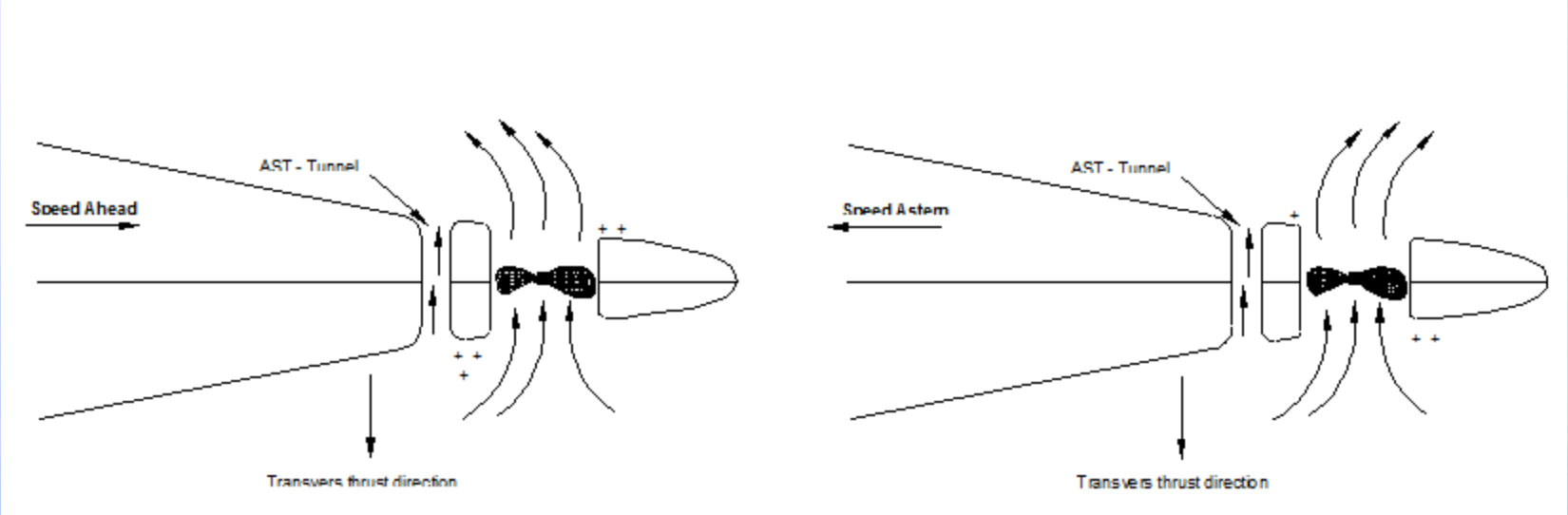


Part-financed by the European Union
(European Regional Development Fund)

# PITCH PROPELLER

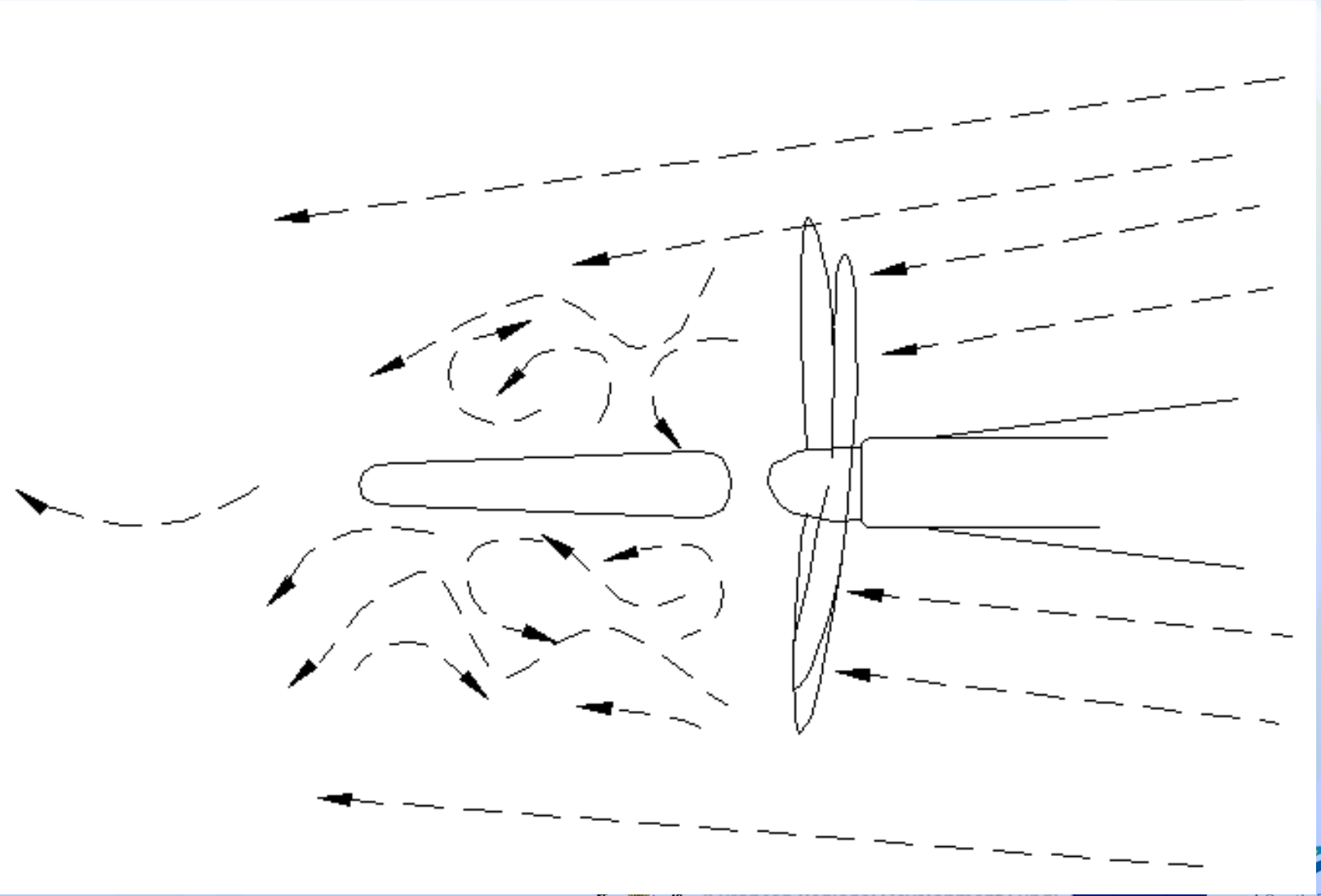

# SHIP’S TRAECTORY

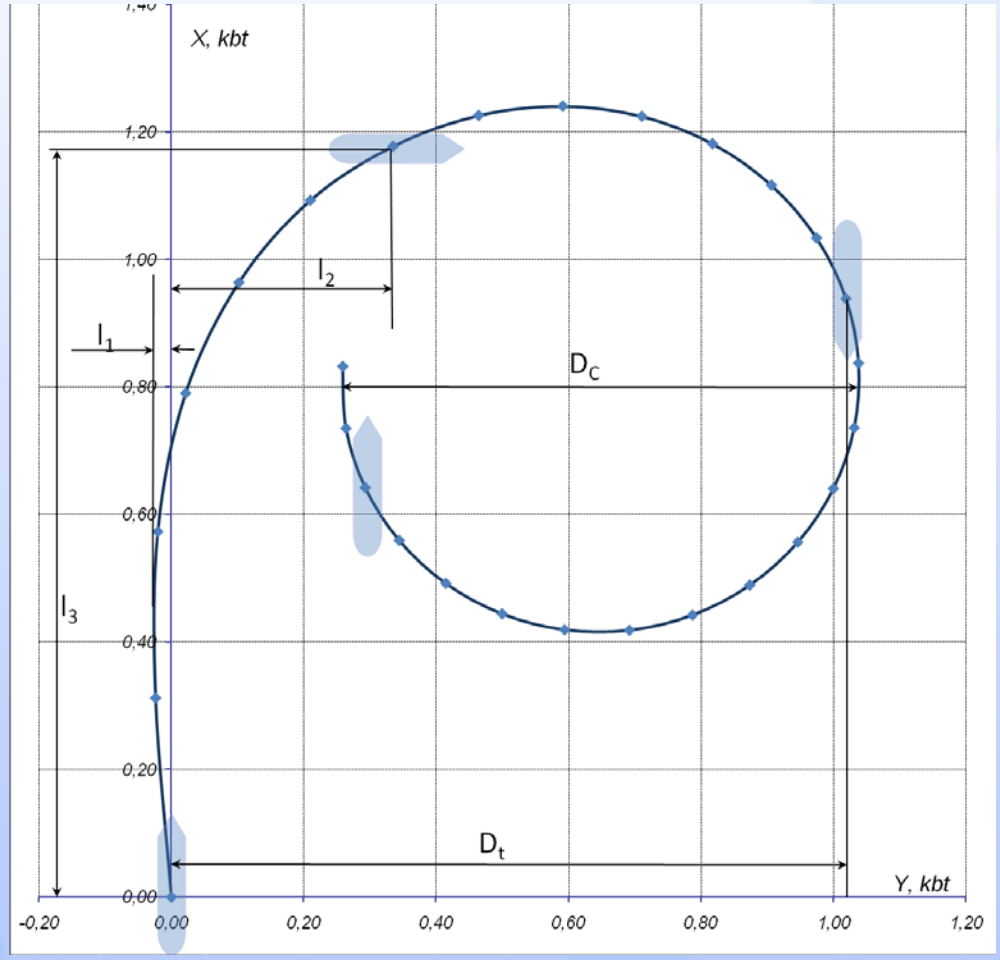


Part-financed by the European Union
(European Regional Development Fund)

# TRAJECTORY ALONG COORDINATES

$$X_{0i} = \int_0^t \upsilon \cos\left(\int_0^t \omega i dt - \beta_i\right) dt$$

$$Y_{0i} = \int_0^t \upsilon \sin\left(\int_0^t \omega i dt - \beta_i\right) dt$$

Part-financed by the European Union
(European Regional Development Fund)

# PROPELLER – TRANSVERSE THRUST

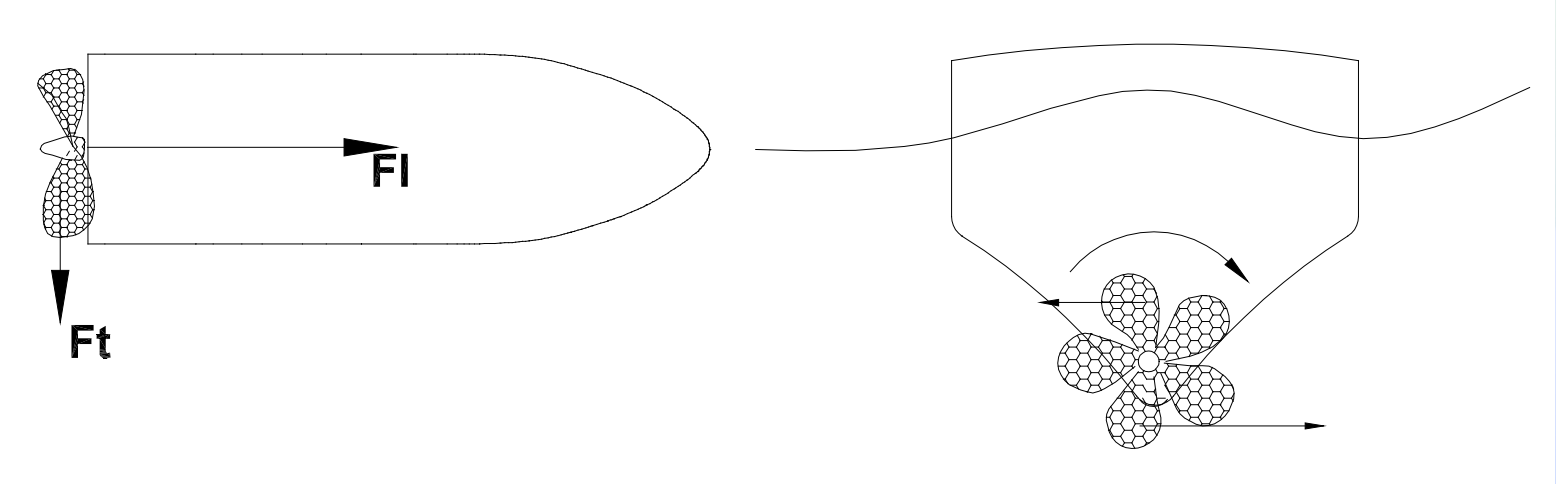


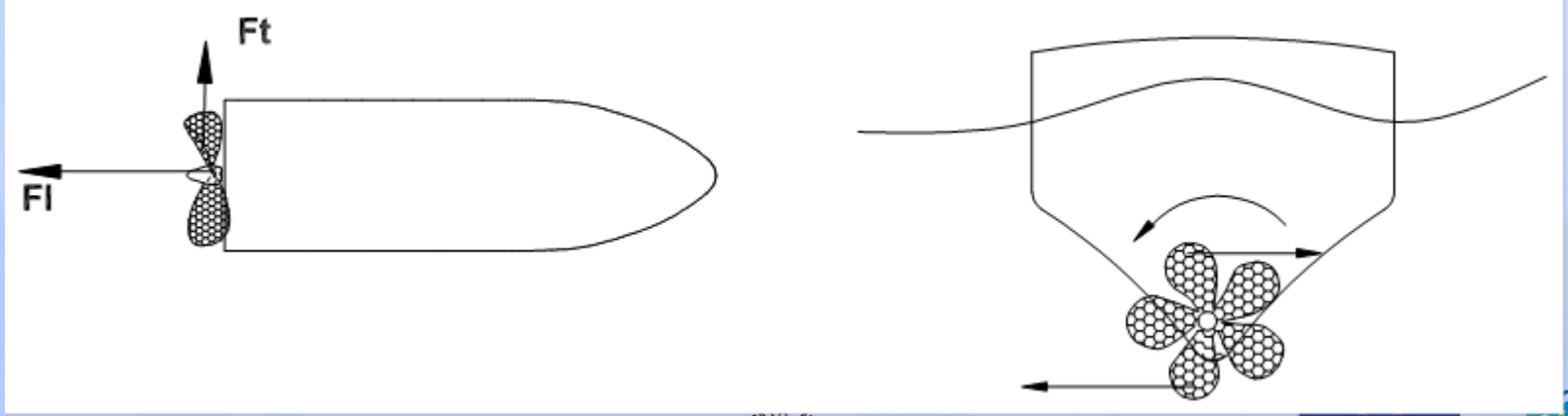


Part-financed by the European Union
(European Regional Development Fund)

# CURRENT FORCE

$$K = k * f * L * d * V^2$$

K = Current force in tonnes
k = Constant, equal to 0.033 fo
deep water
f = Factor for shallow water
L = Vessel length in meters
d = Vessel draft in meters
V = Current speed in m/sec

$$K = k_{deep} * L * d * V^2$$

$$k_{shallow} = k_{deep} * f$$

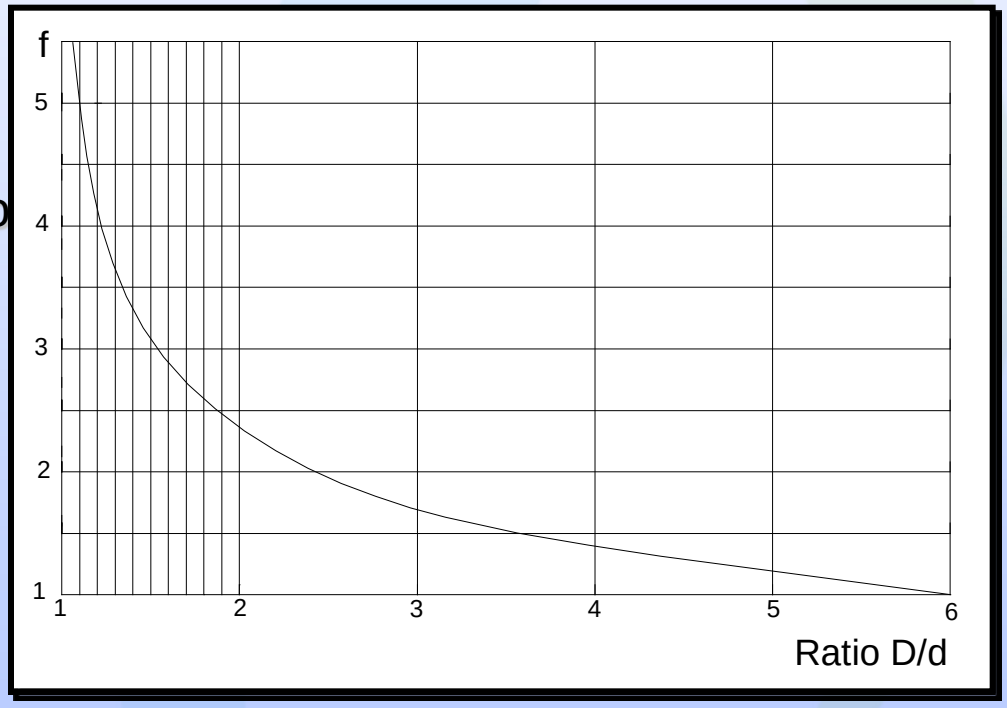


Part-financed by the European Union
(European Regional Development Fund)

# EXAMPLE OF CURRENT FORCE

Water depth 23 metres, cross current 1.5 knots. Factors for various types of vessels are given below

| Type | Length | Draft | Factor | Deep water | Shallow water |
|---|---|---|---|---|---|
| **ULCC** | 343m | 21.6m | 4.50 | 137 tons | 618 tons |
| **VLCC** | 269m | 17.1m | 3.80 | 91 tons | 347 tons |
| **Product loaded** | 228m | 11.5m | 2.25 | 52 tons | 117 tons |
| **Product ballast** | 228m | 7.0m | 1.65 | 32 tons | 52 tons |
| **Car Carrier** | 197m | 9.5m | 1.50 | 37 tons | 56 tons |
| **Cruise Ship** | 166m | 6.5m | 1.50 | 21 tons | 32 tons |
| **Ferry** | 152m | 5.1m | 1.30 | 15 tons | 20 tons |
| **Container** | 318m | 14.0m | 2.75 | 83 tons | 227 tons |
| **Container** | 294m | 10.5m | 2.25 | 57 tons | 128 tons |
| **Feeder** | 176m | 10.3m | 2.25 | 33 tons | 75 tons |
| **Product** | 170m | 11.4m | 2.30 | 35 tons | 83 tons |
| **Feeder** | 120m | 7.6m | 1.60 | 18 tons | 29 tons |
| **Coaster** | 96m | 5.5m | 1.35 | 10 tons | 14 tons |
| **Supply** | 73.6m | 6.2m | 1.40 | 8 tons | 12 tons |

Part-financed by the European Union
(European Regional Development Fund)

# WIND

$$K_{wind} = k * A * V^2$$

K = Wind force in tonnes

k = Constant depending on the ship and direction of the wind

A = Windage area in sq. meters

V = Relative velocity of the wind in m/sec

$k = 0.52 * 10^{-4}$ for a beam wind and

$k = 0.39 * 10^{-4}$ for a longitudinal wind

Part-financed by the European Union
(European Regional Development Fund)

# WIND LOADS

| | Direction of wind | Area sq. m | Velocity of wind | | |
|---|---|---|---|---|---|
| | | | 5 m/s | 15 m/s | 25 m/s |
| Tanker<br>255.000 DWT<br>Draft 11 m | Longitudinal wind | 1390 $m^2$ | 1,4 t | 12 t | 34 t |
| | Beam wind | 5825 $m^2$ | 7,6 t | 68 t | 189 t |
| Tanker<br>125.000 DWT<br>Draft 11 m | Longitudinal wind | 1020 $m^2$ | 1,0 t | 9 t | 25 t |
| | Beam wind | 3440 $m^2$ | 4,5 t | 40 t | 112 t |
| 200m Container<br>4 high on upper deck<br>Draft 10 m | Beam wind | 3825 $m^2$ | 5,0 t | 45 t | 125 t |
| 200m Container<br>4 high on upper deck<br>Draft 11 m | Beam wind | 3625 $m^2$ | 4,7 t | 42 t | 118 t |

Part-financed by the European Union
(European Regional Development Fund)

# SHIP AND TUGS WORK

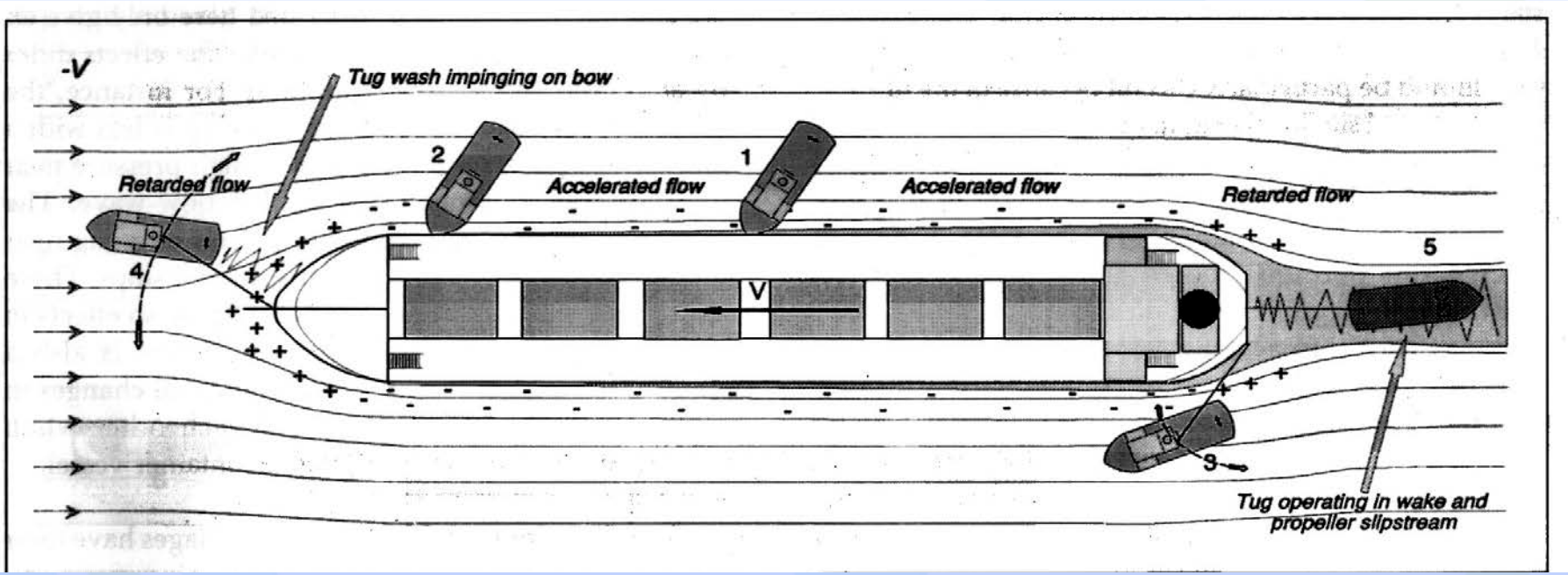


Part-financed by the European Union
(European Regional Development Fund)

# PIVOT POINT


Stopped

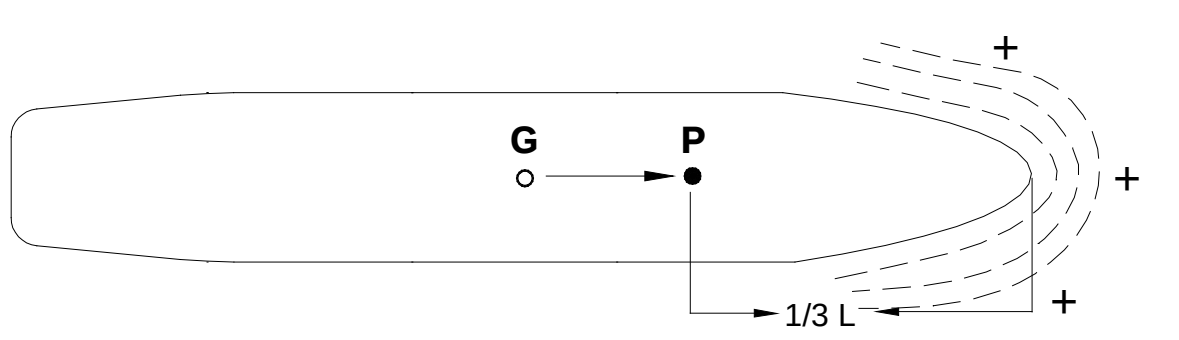


Speed ahead

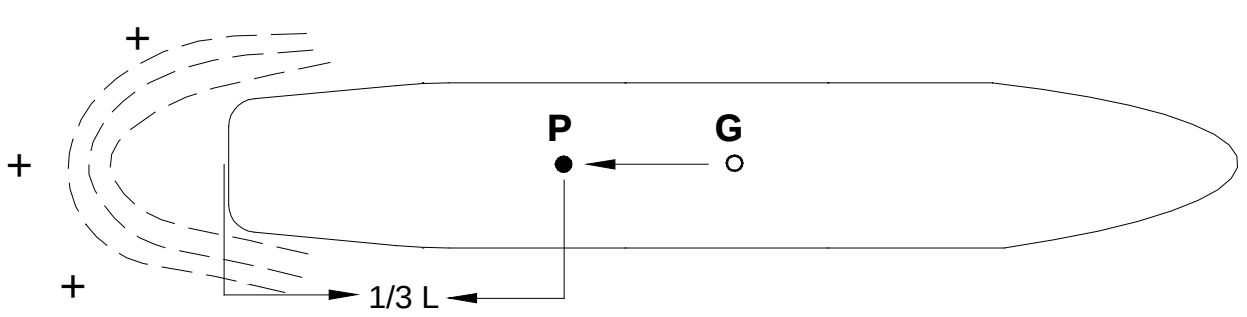


Speed astern

Part-financed by the European Union
(European Regional Development Fund)

# TUG BOLLARD PULL

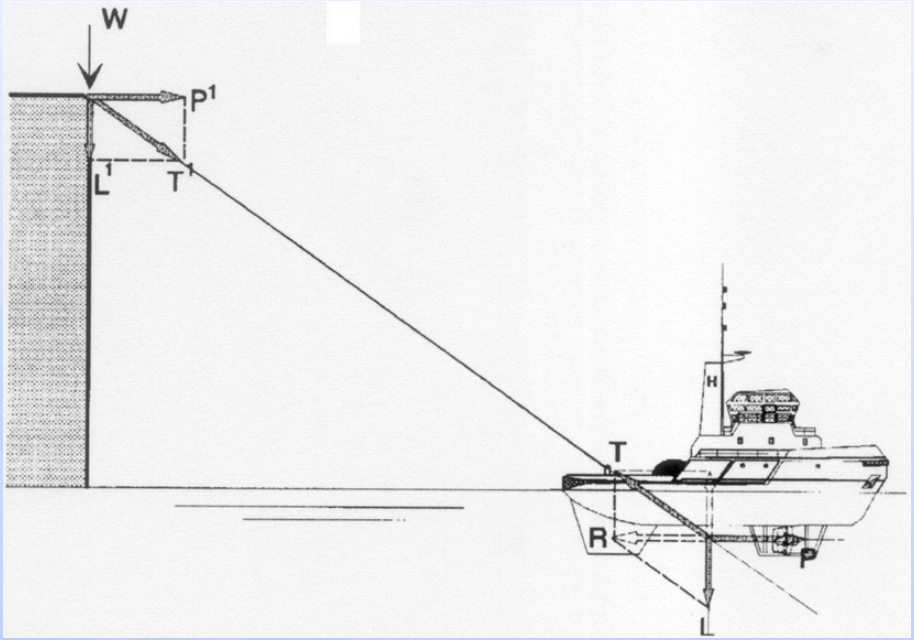


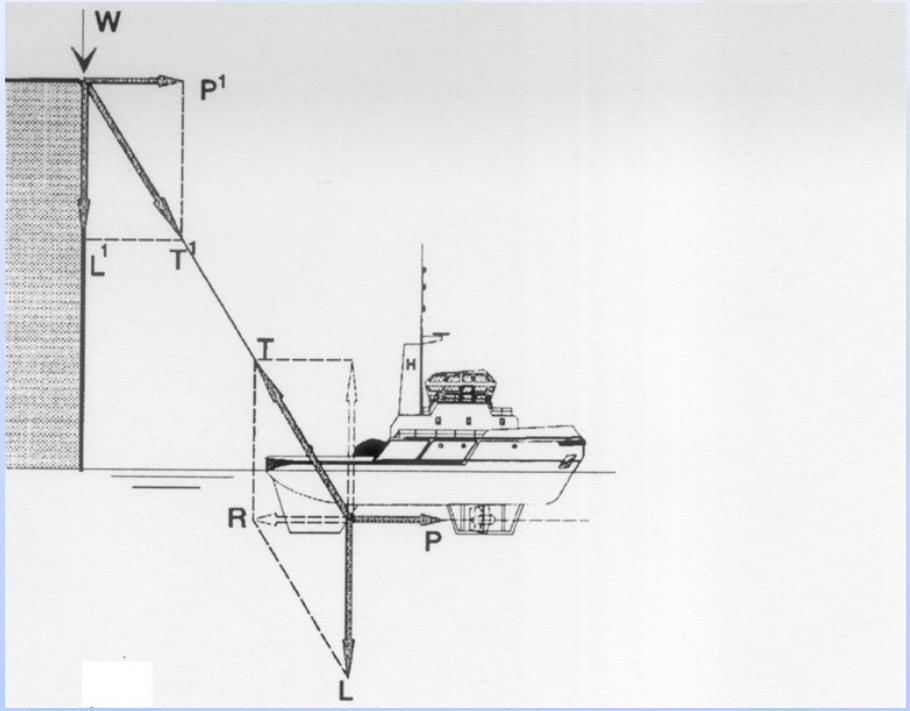


Part-financed by the European Union
(European Regional Development Fund)

# INTRODUCTION SHIP’S BRIDGE SIMULATOR SimFlex 4

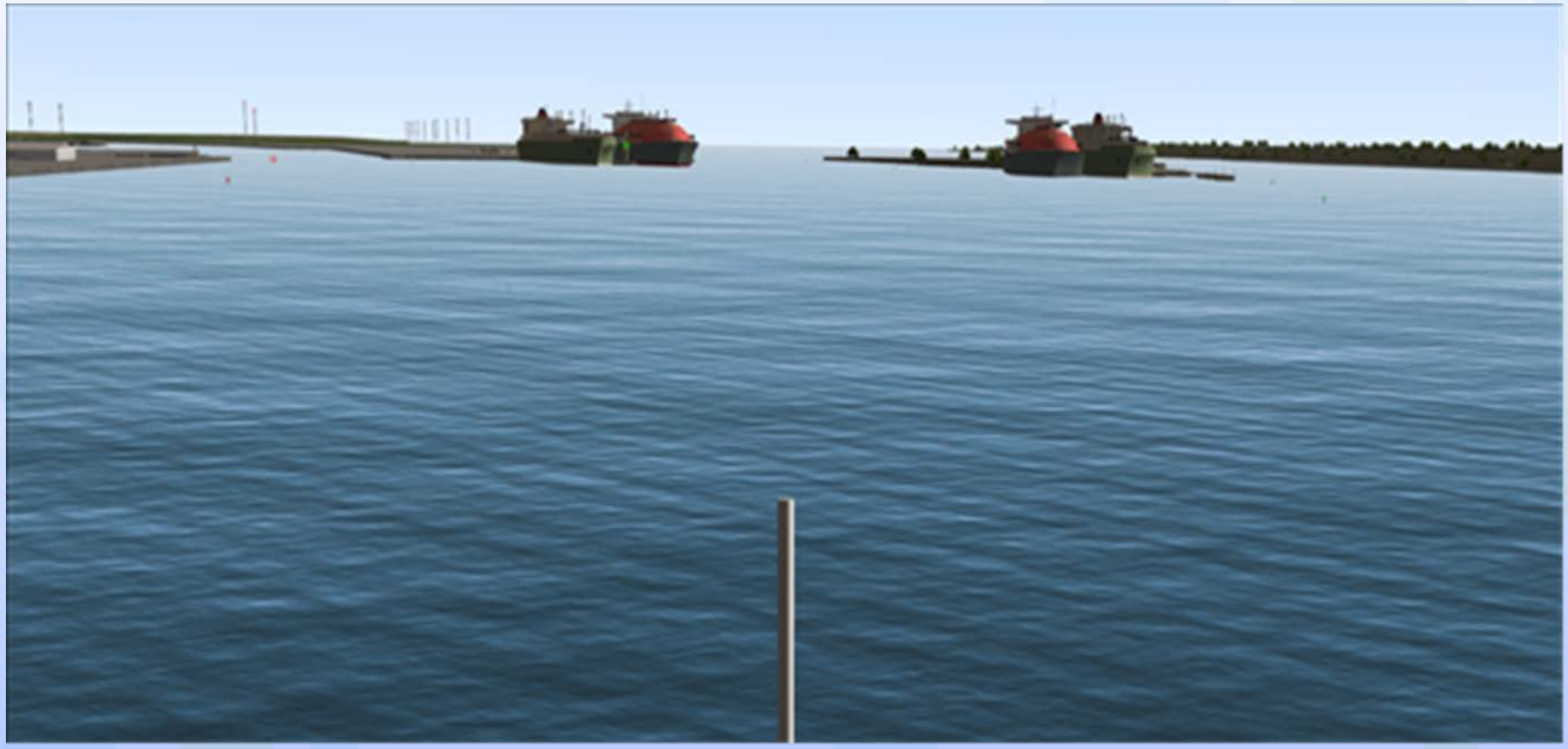

Part-financed by the European Union
(European Regional Development Fund)

# LNG SHIP ARRIVAL IN TO THE PORT IN GOOD CONDITIONS AND DEBRIEFING

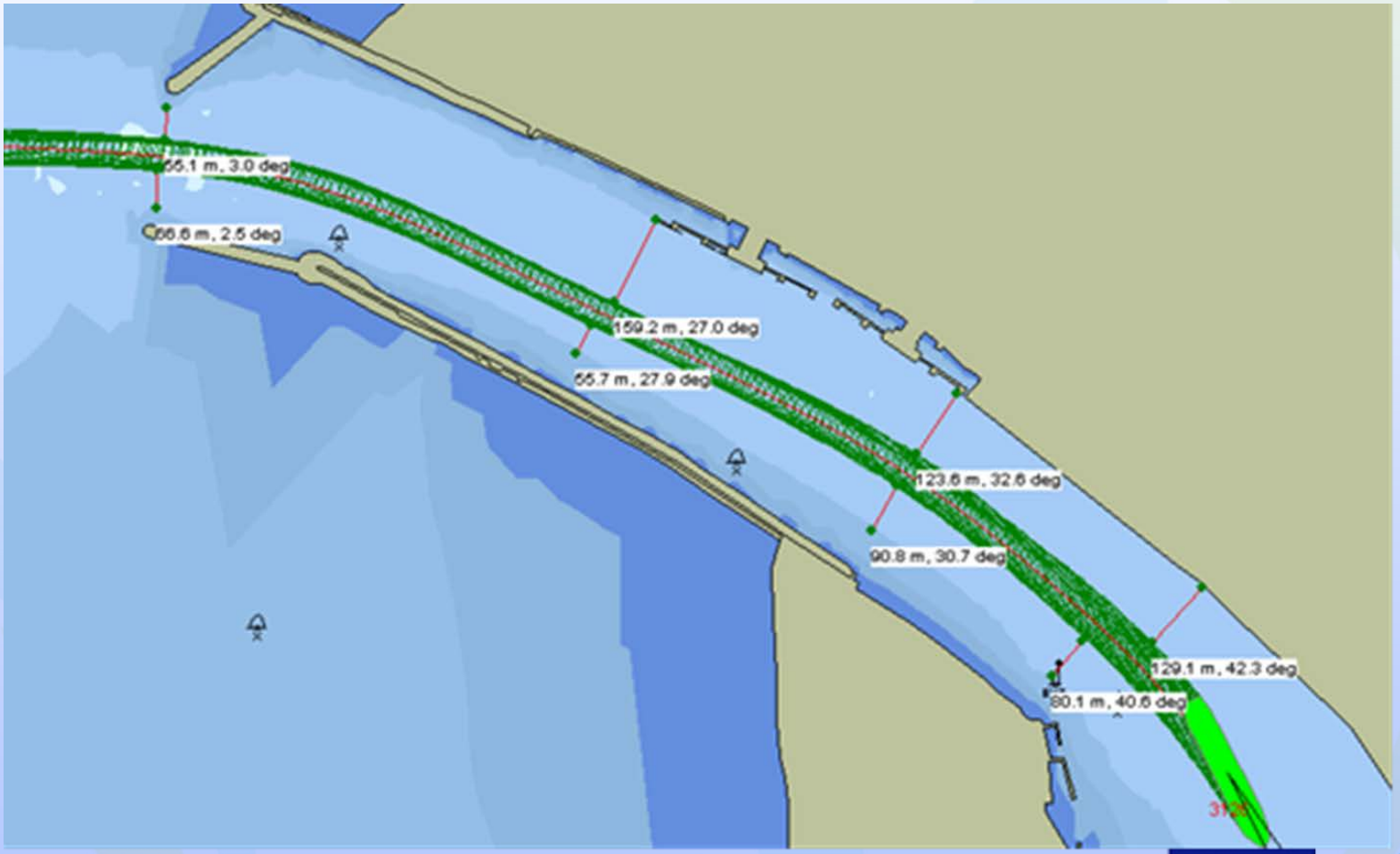


Part-financed by the European Union
(European Regional Development Fund)

# LNG SHIP DEPARTURE FROM THE PORT IN GOOD CONDITIONS AND DEBRIEFING


Part-financed by the European Union
(European Regional Development Fund)

# LNG SHIP ARRIVAL IN TO THE PORT IN LIMIT CONDITIONS AND DEBRIEFING

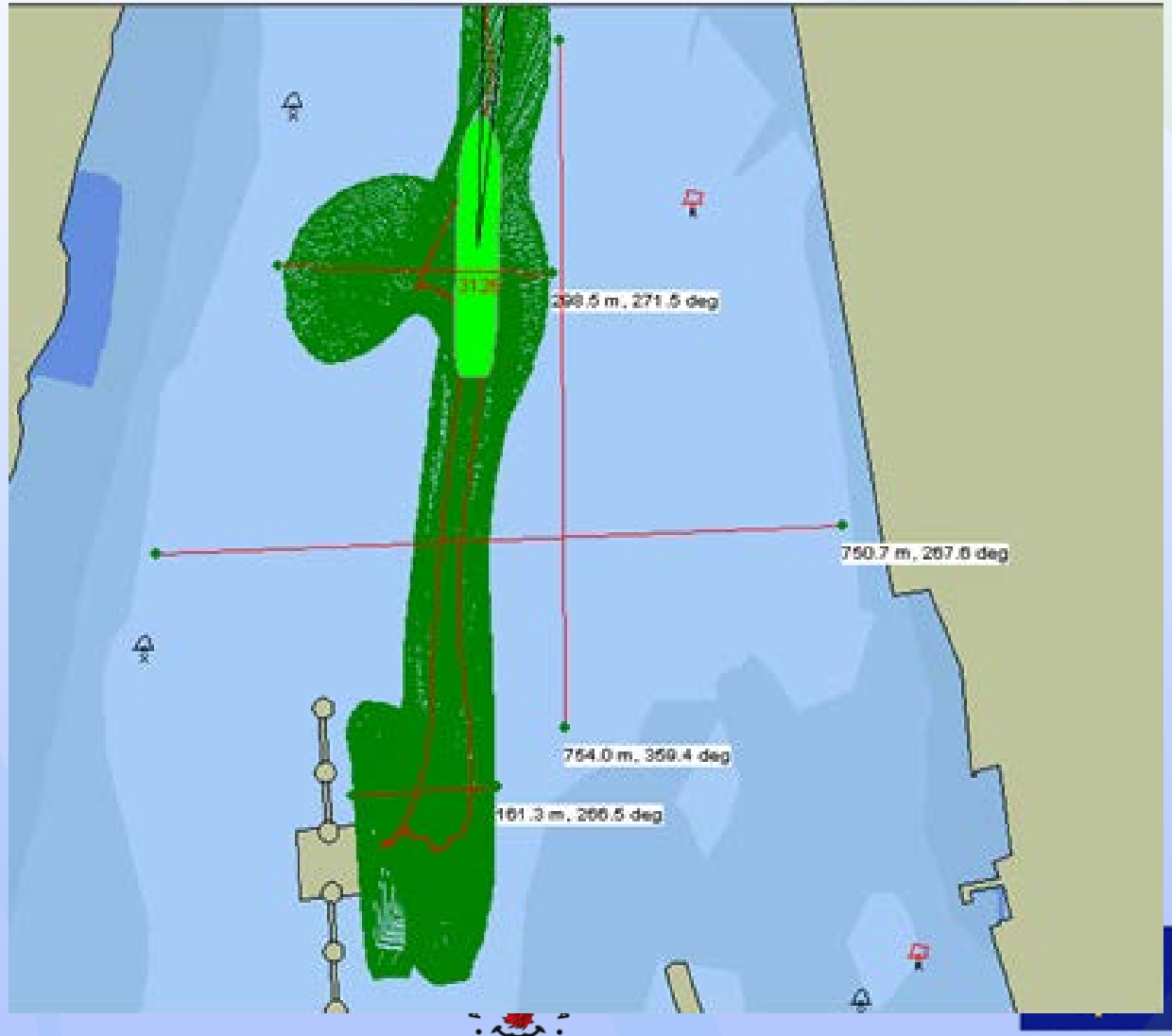

# LNG SHIP DEPARTURE FROM PORT IN LIMIT CONDITIONS WITH TUGS AND DEBRIEFING


Part-financed by the European Union
(European Regional Development Fund)

# LNG SHIP STEERING IN EMERGENCY CONDITIONS (BLOCK OUT) ON THE ARRIVAL AND DEPARTURE WITH TUGS AND DEBRIEFING


Part-financed by the European Union
(European Regional Development Fund)

# CONCLUSIONS

- **Pilots and vessel traffic services (VTS) operators must be continuously trained in the advanced navigation systems and use them on mandatory basis to navigate largest-sized inbound/outbound vessels and ships carrying hazardous cargo (LNGC, oil and oil product tankers).**

Part-financed by the European Union
(European Regional Development Fund)

MT LNG

# Thank you

Part-financed by the European Union
(European Regional Development Fund)

South Baltic
PROGRAMME